CITY OF SOUTH LAKE TAHOE, CALIFORNIA
SIERRA TRACT PHASE 3 & 4
EROSION CONTROL PROJECT

PWC # 2005-01

FORMAL BID No 15-30140044-BN-2

100% BID SET

APPROVED BY:

RAY JARVIS, PE
CITY OF SOUTH LAKE TAHOE
DIRECTOR OF PUBLIC WORKS

DESIGNED BY:

RUSSELL H. VADENAIS
CDM Smith
RCE C80207

FUNDED BY:

CALIFORNIA TAHOE CONSERVANCY
STATE WATER RESOURCES
CONTROL BOARD PROPOSITION 84

UTILITY CONTACTS:

JULIE RYAN: (530) 544-6474
SOUTH TAHOE PUBLIC UTILITY DISTRICT

JEFF MATTHEWS: (530) 543-5297
LIBERTY ENERGY

JERRY SHAMBRE: (530) 621-6946
AT&T

JAKE NEWMAN: (775) 850-1355
CHARTER COMMUNICATIONS

LARRY GIBSON: (775) 887-2863
SOUTHWEST GAS

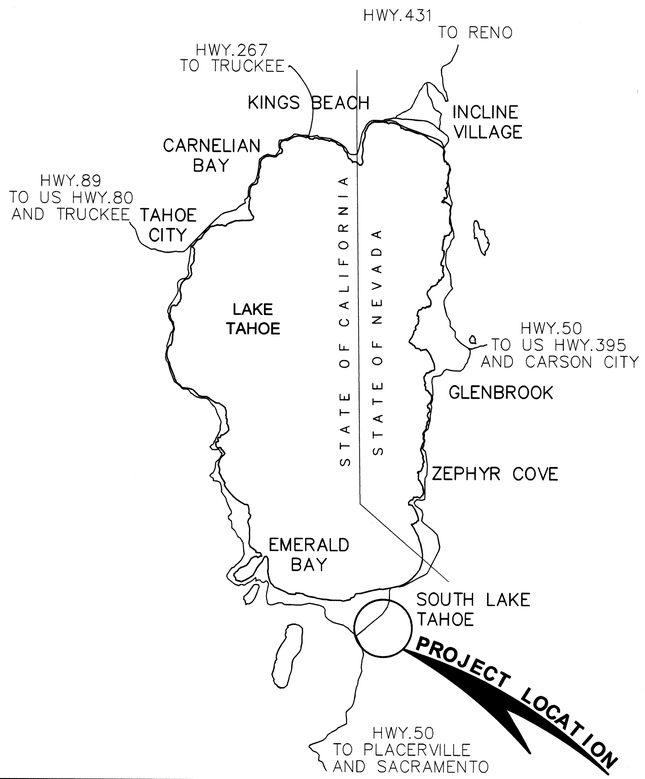

VICINITY MAP

N.T.S

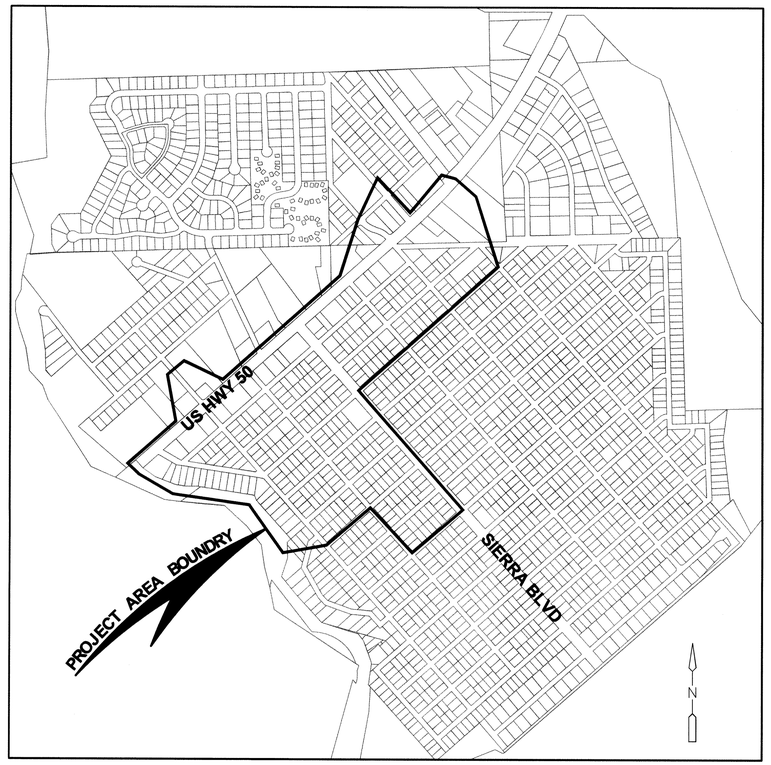

LOCATION MAP

N.T.S

SHEET INDEX:

NO.	SHEET	TITLE
1	G-01	COVER SHEET AND DRAWING INDEX
2	G-02	PROJECT BOUNDARY, SHEET KEY MAP & SURVEY INFORMATION
3	G-03	GENERAL NOTES, LEGENDS, SYMBOLS, AND ABBREVIATIONS
4	G-04	POINT DATA 1
5	G-05	POINT DATA 2
6	G-06	WATER POLLUTION CONTROL PLAN 1
7	G-07	WATER POLLUTION CONTROL PLAN 2
8	C-01	PALMIRA AVE PLAN AND PROFILE 1
9	C-02	PALMIRA AVE PLAN AND PROFILE 2
10	C-03	PALMIRA AVE PLAN AND PROFILE 3
11	C-04	PALMIRA AVE PLAN AND PROFILE 4
12	C-05	PALMIRA AVE PLAN AND PROFILE 5
13	C-06	PALMIRA AVE PLAN AND PROFILE 6
14	C-07	CARSON AVE PLAN AND PROFILE 1
15	C-08	CARSON AVE PLAN AND PROFILE 2
16	C-09	RUBICON TR PLAN AND PROFILE
17	C-10	SUSSEX AVE PLAN AND PROFILE
18	C-11	BROCKWAY AVE PLAN AND PROFILE
19	C-12	OMALLEY DR PLAN AND PROFILE 1
20	C-13	OMALLEY DR PLAN AND PROFILE 2
21	C-14	RIVER DR PLAN AND PROFILE
22	C-15	CHRIS AVE PLAN AND PROFILE 1
23	C-16	CHRIS AVE PLAN AND PROFILE 2
24	C-17	CHRIS AVE PLAN AND PROFILE 3
25	C-18	CHRIS AVE PLAN AND PROFILE 4
26	C-19	WILLIAM AVE PLAN AND PROFILE 1
27	C-20	WILLIAM AVE PLAN AND PROFILE 2
28	C-21	ELWOOD AVE PLAN AND PROFILE 1
29	C-22	ELWOOD AVE PLAN AND PROFILE 2
30	C-23	ARMSTRONG AVE PLAN AND PROFILE 1
31	C-24	ARMSTRONG AVE PLAN AND PROFILE 2
32	C-25	LODI AVE PLAN AND PROFILE 1
33	C-26	LODI AVE PLAN AND PROFILE 2
34	C-27	LODI AVE PLAN AND PROFILE 3
35	C-28	STOCKTON AVE PLAN AND PROFILE 1
36	C-29	STOCKTON AVE PLAN AND PROFILE 2
37	C-30	STOCKTON AVE PLAN AND PROFILE 3
38	C-31	STOCKTON AVE PLAN AND PROFILE 4
39	C-32	SIERRA BLVD PLAN AND PROFILE
40	C-33	RENO AVE PLAN AND PROFILE 1
41	C-34	RENO AVE PLAN AND PROFILE 2
42	C-35	RIVER DR INFILTRATION GALLERY
43	C-36	CHRIS AVE BASIN
44	C-37	WILLIAM AVE BASIN
45	C-38	LODI AVE INFILTRATION GALLERY
46	C-39	LODI AVE BASIN
47	D-01	CIVIL DETAILS 1
48	D-02	CIVIL DETAILS 2
49	D-03	CIVIL DETAILS 3
50	D-04	CIVIL DETAILS 4
51	D-05	CIVIL DETAILS 5
52	D-06	CIVIL DETAILS 6
53	D-07	CIVIL DETAILS 7
54	D-08	CIVIL DETAILS 8
55	D-09	CIVIL DETAILS 9
56	D-10	STRUCTURAL DETAILS AND NOTES
57	D-11	WATER POLLUTION CONTROL DETAILS

Underground Service Alert

Call: TOLL FREE
1-800-227-2600

TWO WORKING DAYS BEFORE YOU DIG

REV	DATE	DESCRIPTION	BY

WARNING
0 1/2" 1"
IF THIS BAR SCALE DOES NOT MEASURE 1" THIS DWG HAS BEEN REDUCED SCALE ACCORDINGLY

CITY OF SOUTH LAKE TAHOE
DEPARTMENT OF PUBLIC WORKS
1052 TATA LANE
SOUTH LAKE TAHOE, CA 96150
Ph: (530) 542-6030 Fax: (541-7524

REGISTERED PROFESSIONAL ENGINEER
RUSSELL H. VADENAIS
No. C80207
Exp. 09/30/16
CIVIL
STATE OF CALIFORNIA

CDM Smith
12313 Soaring Way, Suite 2-D
Truckee, California 96161
Tel (530) 582-7235
Fax (530) 582-1098

DESIGNED BY: RHV
DRAWN BY: OMN
SHEET CHK'D BY: RHV
CROSS CHK'D BY: SLS
DATE: MAY 8, 2015

SIERRA TRACT PH 3 & 4 EROSION CONTROL PROJECT

SHEET TITLE

COVER SHEET AND DRAWING INDEX

100% BID SET

JOB NO. 27497-93981
SCALE: AS NOTED
SHEET 1 OF 57
DWG. NO:
G-01

© 2012 CDM SMITH ALL RIGHTS RESERVED.
REUSE OF DOCUMENTS: THESE DOCUMENTS AND DESIGNS PROVIDED BY PROFESSIONAL SERVICE, INCORPORATED HEREIN, ARE THE PROPERTY OF CDM SMITH AND ARE NOT TO BE USED, IN WHOLE OR PART, FOR ANY OTHER PROJECT WITHOUT THE WRITTEN AUTHORIZATION OF CDM SMITH.

SIERRA TRACT EROSION CONTROL PROJECT PHASE 3 AND 4

PORTION OF
SECTION 3 T.12 N., R.18 E., M.D.M.
EL DORADO COUNTY, CALIFORNIA

BOUNDARY SHOWN HEREON IS COMPILED FROM RECORD MAPS AND DOCUMENTS AND ESTABLISHED FROM FOUND MONUMENTS

HORIZONTAL DATUM:
LOCAL GROUND COORDINATES WITH TIES TO NAD83(1991.35) CA HPGN

VERTICAL DATUM:
NAVD29

TOPOGRAPHIC SURVEY COMPILED AT 1' CONTOUR INTERVAL

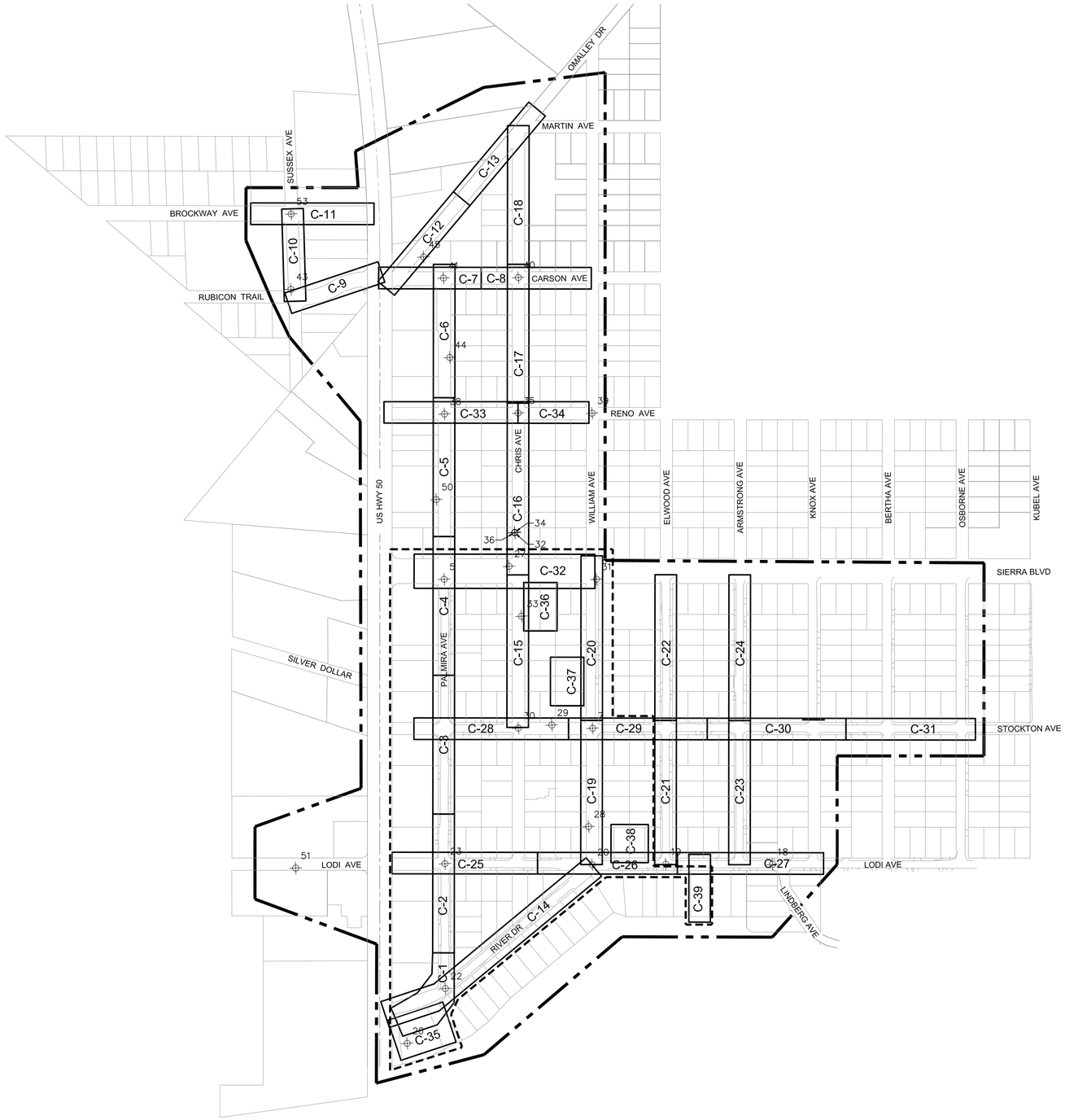

TREE REMOVAL TABLE (GREATER THAN 14 INCHES)		
SHEET NO.	TREE TYPE	DIAMETER (IN)
C-02	PINE	30
C-07	PINE	36
C-07	PINE	14
C-07	PINE	22
C-07	PINE	14
C-07	PINE	28
C-18	PINE	20
C-18	PINE	24
C-25	PINE	24
C-28	PINE	32
C-33	PINE	24
C-38	PINE	20
C-38	PINE	18
C-38	PINE	22
C-39	PINE	30
C-39	PINE	20

SURVEY CONTROL TABLE				
POINT	NORTHING	EASTING	ELEVATION	DESCRIPTION
5	2104995.060	7134634.187	6253.388	SURVEY MARKER W/ANDREGG WASHER
7	2104314.250	7134592.424	6248.759	SURVEY MARKER W/ANDREGG WASHER
18	2103584.885	7134649.588	6274.979	SURVEY MARKER W/ANDREGG WASHER
19	2103844.299	7134420.353	6251.725	SURVEY MARKER W/ANDREGG WASHER
20	2104021.900	7134260.694	6244.030	SURVEY MARKER W/ANDREGG WASHER
22	2104111.496	7133643.914	6253.256	SURVEY MARKER W/ANDREGG WASHER
23	2104381.305	7133945.913	6255.330	SURVEY MARKER W/ANDREGG WASHER
26	2104086.134	7133428.953	6250.852	SURVEY MARKER W/ANDREGG WASHER
27	2104865.626	7134805.204	6247.562	PK NAIL W/MAPCA WASHER
28	2104112.385	7134345.274	6244.535	PK NAIL W/MAPCA WASHER
29	2104419.999	7134512.219	6246.649	PK NAIL W/MAPCA WASHER
30	2104494.807	7134432.943	6248.764	SURVEY MARKER W/MAPCA WASHER
31	2104625.806	7134962.020	6248.816	SURVEY MARKER W/MAPCA WASHER
32	2104924.303	7134898.827	6247.173	SURVEY MARKER W/MAPCA WASHER
33	2104727.958	7134710.740	6246.780	PK NAIL W/MAPCA WASHER
34	2104925.128	7134899.926	6247.092	SURVEY MARKER W/MAPCA WASHER
35	2105173.315	7135196.499	6249.598	SURVEY MARKER W/MAPCA WASHER
36	2104924.303	7134898.827	6247.092	SURVEY MARKER W/MAPCA WASHER
38	2105350.165	7135035.616	6249.861	SURVEY MARKER W/MAPCA WASHER
39	2104993.670	7135355.421	6252.990	PK NAIL W/MAPCA WASHER
40	2105464.603	7135525.657	6258.686	SURVEY MARKER W/MAPCA WASHER
41	2105645.213	7135363.050	6253.565	SURVEY MARKER W/MAPCA WASHER
43	2105990.827	7135007.360	6257.019	PK NAIL W/MAPCA WASHER
44	2105458.869	7135184.046	6250.536	SURVEY MARKER W/MAPCA WASHER
45	2105738.869	7135371.320	6254.786	SURVEY MARKER W/MAPCA WASHER
50	2105185.976	7134810.676	6251.815	SCRIBED 'X'
51	2104734.000	7133613.626	6255.150	PK NAIL W/MAPCA WASHER
53	2106152.749	7135190.659	6254.689	PK NAIL W/MAPCA WASHER

LEGEND

PROJECT BOUNDARY

2015 MINIMUM LIMITS OF WORK

SURVEY CONTROL POINT

N

1" = 200'
100 0 200

100% BID SET

REV	DATE	DESCRIPTION	BY

WARNING
0 1/2" 1"
IF THIS BAR SCALE DOES NOT MEASURE 1" THIS DWG HAS BEEN REDUCED SCALE ACCORDINGLY

CITY OF SOUTH LAKE TAHOE
DEPARTMENT OF PUBLIC WORKS
1052 TATA LANE
SOUTH LAKE TAHOE, CA 96150
Ph: (530) 542-6030 Fax: (530) 541-7524

REGISTERED PROFESSIONAL ENGINEER No. C80207 Exp. 09/30/16 CIVIL STATE OF CALIFORNIA

CDM Smith
12313 Soaring Way, Suite 2-D
Truckee, California 96161
Tel (530) 582-7235
Fax (530) 582-1098

DESIGNED BY: RHV
DRAWN BY: OMN
SHEET CHK'D BY: RHV
CROSS CHK'D BY: SLS
DATE: MAY 8, 2015

SIERRA TRACT PH 3 & 4 EROSION CONTROL PROJECT

SHEET TITLE
PROJECT BOUNDARY, SHEET KEY MAP & SURVEY INFORMATION

JOB NO. 27497-93981
SCALE: AS NOTED
SHEET 2 OF 57
DWG. NO:
G-02

© 2012 CDM SMITH ALL RIGHTS RESERVED.
REUSE OF DOCUMENTS: THESE DOCUMENTS AND DESIGNS PROVIDED BY PROFESSIONAL SERVICE, INCORPORATED HEREIN, ARE THE PROPERTY OF CDM SMITH AND ARE NOT TO BE USED, IN WHOLE OR PART, FOR ANY OTHER PROJECT WITHOUT THE WRITTEN AUTHORIZATION OF CDM SMITH.

GENERAL NOTES:

1. CONTRACTOR'S LICENSE CLASSIFICATIONS:
IN ACCORDANCE WITH THE PROVISIONS OF CALIFORNIA PUBLIC CONTRACT CODE 3300, THE OWNER HAS DETERMINED THAT THE CONTRACTOR SHALL POSSESS A VALID CLASS "A" AND C-27 LICENSE AT THE TIME BIDS ARE RECEIVED.

2. THE CONSTRUCTION METHODS AND MATERIALS SHALL CONFORM TO THE 2010 EDITION OF THE STATE OF CALIFORNIA, DEPARTMENT OF TRANSPORTATION STANDARD SPECIFICATIONS, AND STANDARD PLANS, AND APPLICABLE STANDARD DRAWINGS OF THE 2009 EDITION OF THE CITY OF SOUTH LAKE TAHOE PUBLIC IMPROVEMENT AND ENGINEERING STANDARDS. IN CASE OF CONFLICT, REFER TO THE PROJECT SPECIAL PROVISIONS FOR ORDER OF PRECEDENCE.

3. THE CITY OF SOUTH LAKE TAHOE HAS MADE EVERY EFFORT TO SHOW LOCATIONS OF ANY AND ALL EXISTING SURFACE AND SUBSURFACE STRUCTURES. HOWEVER, ACTUAL FIELD CONDITIONS AND LOCATION CAN VARY CONSIDERABLY FROM PLAN LOCATIONS. THEREFORE, CITY OF SOUTH LAKE TAHOE CANNOT, AND DOES NOT, ASSUME RESPONSIBILITY OF THE EXISTENCE OR LOCATION OF ANY STRUCTURE SUCH AS, BUT NOT LIMITED TO, UTILITIES, PIPELINES AND SEWERS. THE CONTRACTOR IS RESPONSIBLE FOR CONTACTING ALL AGENCIES AND/OR OWNERS TO VERIFY THIS INFORMATION AND IDENTIFY ANY AND ALL STRUCTURE NOT SHOWN ON THESE DRAWINGS PRIOR TO AND DURING CONSTRUCTION OF IMPROVEMENTS SHOWN HERON, AND TO CONTACT THE ENGINEER IN THE EVENT OF A DISCREPANCY. DESIGN ADJUSTMENTS MAY BE NECESSARY TO AVOID UTILITY CONFLICTS.

4. THE CONTRACTOR SHALL BE IN RECEIPT OF CITY APPROVED PLANS PRIOR TO BEGINNING CONSTRUCTION WITHIN THE STREET RIGHT-OF-WAY. APPROVAL OF PLANS BY CITY OF SOUTH LAKE TAHOE DEPARTMENT OF PUBLIC WORKS IS BASED ON THE ASSUMPTION THAT THE INFORMATION CONTAINED ON THE PLANS AND SUPPORTING DOCUMENTS IS CORRECT. APPROVAL OF THE PLANS BY THE CITY DOES NOT SUBROGATE THE ENGINEER OF RECORD'S RESPONSIBILITY FOR THIS PROJECT. ANY AND ALL ERRORS AND OMISSIONS ARE THE RESPONSIBILITY OF THE ENGINEER OF RECORD.

5. CONTACT THE CITY OF SOUTH LAKE TAHOE DEPARTMENT OF PUBLIC WORKS AT (530) 542-6030 TWO (2) WORKING DAYS PRIOR TO THE START OF CONSTRUCTION.

6. CONTRACTOR TO PROTECT EXISTING LANDSCAPING TREES, SHRUBS, BUSHES, VEGETATION AND ALL EXISTING ABOVE AND BELOW GRADE STRUCTURES UNLESS SPECIFICALLY DIRECTED OTHERWISE ON THE PLANS.

7. FOR ALL TRENCH EXCAVATIONS 5 FEET OR MORE IN DEPTH, THE CONTRACTOR SHALL OBTAIN A PERMIT FROM THE DIVISION OF INDUSTRIAL SAFETY (2422 ARDEN WAY, SUITE 55, SACRAMENTO; PHONE (916) 263-2800) PRIOR TO BEGINNING EXCAVATION. A COPY OF THIS PERMIT SHALL BE AVAILABLE AT THE CONSTRUCTION SITE AT ALL TIMES.

8. THE CONTRACTOR SHALL BE RESPONSIBLE FOR AND FURNISH, INSTALL, AND MAINTAIN TEMPORARY SIGNS, BRIDGES, BARRICADES, FLAGGERS, AND OTHER FACILITIES TO ADEQUATELY SAFEGUARD THE GENERAL PUBLIC AND WORK, AND TO PROVIDE FOR THE PROPER ROUTING OF VEHICULAR AND PEDESTRIAN TRAFFIC. CONSTRUCTION OPERATIONS SHALL COMPLY WITH THE WORK AREA AND TRAFFIC CONTROL HANDBOOK (WATCH 2012 EDITION). THE CONTRACTOR SHALL PROVIDE A TRAFFIC CONTROL PLAN TO THE CITY ENGINEER FOR REVIEW AND EVALUATION. THIS PLAN SHALL INCLUDE TRAFFIC CONTROL MEASURES AND/OR DETOURS FOR VEHICLES AFFECTED BY THE CONSTRUCTION WORK. THE EVALUATED PLAN SHALL BE DELIVERED TO THE CONSTRUCTION INSPECTOR PRIOR TO THE IMPLEMENTATION OF TRAFFIC CONTROL MEASURES.

9. THE CONTRACTOR SHALL BE RESPONSIBLE FOR MAINTAINING RED-LINED RECORD DRAWINGS FOR ALL WORK THROUGHOUT THE COURSE OF CONSTRUCTION. SUCH DRAWINGS SHALL RECORD THE LOCATION AND GRADE OF ALL UNDERGROUND IMPROVEMENTS CONSTRUCTED AND SHALL BE DELIVERED TO THE CONSTRUCTION INSPECTOR PRIOR TO, AND IN CONSIDERATION OF, THE CITY'S ACCEPTANCE OF WORK.

10. THE CONTRACTOR SHALL BE RESPONSIBLE FOR THE PROTECTION OF ALL EXISTING SURVEY MONUMENTS AND BENCHMARKS DURING CONSTRUCTION.

11. THE CONTRACTOR SHALL MAINTAIN ALL EXISTING DRAINAGE AND SEWER FACILITIES WITHIN THE CONSTRUCTION AREA UNTIL NEW DRAINAGE IMPROVEMENTS ARE IN PLACE AND FUNCTIONING.

12. IF BONE, STONE OR OTHER CULTURAL ARTIFACTS ARE DISCOVERED, THE CONTRACTOR SHALL IMMEDIATELY CEASE ALL PROJECT ACTIVITIES IN THE AREA OF THE FIND AND NOTIFY THE OWNER. NO ADDITIONAL WORK SHALL OCCUR IN THE AREA UNTIL A QUALIFIED ARCHAEOLOGIST IS CONSULTED FOR RECOMMENDED PROCEDURES AND THE CONTRACTOR IS GIVEN WRITTEN APPROVAL TO PROCEED. ALL SUCH PROCEDURES SHOULD BE CONDUCTED WITHIN THE SECTION 106 OF THE NHPA AND CEQA SECTION 15064.5 GUIDELINES.

13. THE LIMITS AND AMOUNTS OF ALL MATERIALS TO BE SALVAGED SHALL BE DETERMINED IN THE FIELD BY THE ENGINEER.

14. EXISTING ASPHALT PAVEMENT SHALL BE CUT TO A NEAT STRAIGHT LINE. THE EXPOSED EDGE SHALL BE TACKED WITH EMULSION PRIOR TO PAVING.

15. EXACT LIMITS OF CURB AND GUTTER, DRIVEWAY, AND PAVEMENT REMOVAL AND RECONSTRUCTION SHALL BE DETERMINED IN THE FIELD BY THE ENGINEER.

16. COMPACTION OF TRENCH BACKFILL BY MEANS OF JETTING WILL NOT BE ALLOWED WITHIN THE CITY RIGHT OF WAY UNLESS APPROVED BY THE ENGINEER.

17. GUTTER SLOPES FROM FLOWLINE TO LIP SHALL BE FIVE PERCENT BETWEEN ROUND CORNER CURB RETURNS. THE FIVE PERCENT SLOPE SHALL BE TRANSITIONED TO THE STANDARD GUTTER SLOPE OVER A DISTANCE OF THREE TO FIVE FEET, AS DIRECTED IN THE FIELD BY THE ENGINEER.

18. ALL EXISTING UTILITIES SHOWN OR NOT SHOWN ON DRAWINGS ARE APPROXIMATE. THE UTILITY INFORMATION WAS PROVIDED BY OTHERS AND CITY/CDM SMITH OR ENGINEER DOES NOT GUARANTEE THE ACCURACY OF SAID UTILITIES. THE CONTRACTOR IS RESPONSIBLE FOR DETERMINING THE EXACT LOCATION (BOTH HORIZONTAL AND VERTICAL) OF ALL EXISTING UTILITIES AND FOR THE PROTECTION OF AND REPAIR OF DAMAGE TO THEM. CONTACT UNDERGROUND SERVICE ALERT 1-800-227-2600, 48 HOURS BEFORE WORK IS TO BEGIN.

19. NEW STORM DRAIN STRUCTURES AND PIPELINES SHALL BE INSTALLED WITH A MINIMUM OF 4-FOOT HORIZONTAL SEPARATION FROM EXISTING WATER MAINS. STORM DRAIN PIPES THAT CROSS OVER OR UNDER EXISTING WATER MAINS SHALL BE INSTALLED WITH A MINIMUM OF 1-FOOT VERTICAL SEPARATION FROM THE WATER MAIN, AND THE STORM DRAIN PIPE SHALL NOT HAVE JOINTS WITHIN 10-FEET OF ALL WATER MAIN CROSSINGS. IN THE EVENT THESE BASIC SEPARATION CRITERIA CANNOT BE MET, CONTACT THE SOUTH LAKE TAHOE PUBLIC UTILITY DISTRICT TO DETERMINE SPECIAL PRECAUTIONS AND MEASURES. REFER TO THE STATE OF CALIFORNIA WATER WORKS STANDARDS FOR ADDITIONAL GUIDANCE.

20. AC GRADES & GUTTER FLOW LINES AS SHOWN ON THESE PLANS ARE SUBJECT TO MINOR FIELD ADJUSTMENTS AS DIRECTED BY THE ENGINEER.

21. GRADES FOR CURB & GUTTER AND VALLEY GUTTER SHALL BE SET A MINIMUM OF EIGHT WORKING DAY HOURS IN ADVANCE OF CONCRETE PLACEMENT. THE ENGINEER SHALL BE NOTIFIED FOR INSPECTION & APPROVAL PRIOR TO CONCRETE PLACEMENT.

22. STORM DRAIN PIPE ELEVATIONS SUBJECT TO MINOR FIELD ADJUSTMENTS TO MINIMIZE UTILITY CONFLICTS AS APPROVED BY THE ENGINEER.

23. CONSTRUCTION OF CURB & GUTTER ALONG EXISTING PAVED DRIVEWAYS SHALL NOT RESULT IN PONDING BEHIND THE CURB. CONTRACTOR SHALL LOWER THE BACK OF CURB ELEVATION AS NECESSARY DURING CONCRETE PLACEMENT TO ASSURE THAT EXISTING DRAINAGE OF THE DRIVEWAYS WILL BE MAINTAINED.

24. CONTRACTOR SHALL NOTIFY CITY ENGINEER PRIOR TO INSTALLATION OF SNOW POLES. CITY ENGINEER WILL MARK LOCATION OF SNOW POLES.

25. IF HUMAN REMAINS ARE DISCOVERED DURING PROJECT ACTIVITY, THE CONTRACTOR SHALL IMMEDIATELY CEASE ALL PROJECT ACTIVITIES IN THE AREA OF THE FIND AND NOTIFY THE OWNER FOR FURTHER DIRECTION IN CONTACTING THE COUNTY CORONER AND/OR A QUALIFIED ARCHAEOLOGIST. IF THE REMAINS ARE DETERMINED TO BE OF NATIVE AMERICAN ORIGIN, BOTH THE NATIVE AMERICAN HERITAGE COMMISSION AND MEMBERS OF THE WASHOE TRIBE (OR OTHER IDENTIFIED DESCENDANTS) MUST BE NOTIFIED TO INSURE THAT PROPER TREATMENT IS GIVEN TO THE BURIAL SITE. ALL PROCEDURES SHOULD BE CONDUCTED WITHIN THE CONTEXT OF CEQA, SECTION 15064.5 GUIDELINES AND THE CALIFORNIA PUBLIC RESOURCES CODE 5097.95, 5097.98 AND 5097.99.

26. THE CONTRACTOR SHALL OBTAIN A PERMIT FROM EL DORADO COUNTY AIR POLLUTION CONTROL DISTRICT. THE CONTRACTOR SHALL SUBMIT TO THE DISTRICT A COMPREHENSIVE INVENTORY (I.E. MAKE, MODEL, YEAR, EMISSION RATING) OF ALL THE HEAVY-DUTY OFF-ROAD EQUIPMENT (50 HORSEPOWER OF GREATER) THAT WILL BE USED IN AGGREGATE OF 40 OR MORE HOURS FOR THE CONSTRUCTION PROJECT. IF ANY NEW EQUIPMENT IS ADDED AFTER SUBMISSION OF THE INVENTORY, THE PRIME CONTRACTOR SHALL CONTACT THE APCD PRIOR TO THE NEW EQUIPMENT BEING UTILIZED. AT LEAST THREE BUSINESS DAYS PRIOR TO THE USE OF SUBJECT HEAVY-DUTY OFF-ROAD EQUIPMENT, THE CONTRACTOR SHALL PROVIDE THE DISTRICT WITH THE ANTICIPATED CONSTRUCTION TIMELINE INCLUDING START DATE, NAME, AND PHONE NUMBER OF THE PROPERTY OWNER, PROJECT MANAGER, AND ON-SITE FOREMAN.

27. IF AT ANY TIME DURING THE COURSE OF EXECUTING THE PROPOSED PROJECT, EVIDENCE OF SOIL AND/OR GROUNDWATER CONTAMINATION WITH HAZARDOUS MATERIAL IS ENCOUNTERED, THE CONTRACTOR SHALL IMMEDIATELY STOP THE PROJECT AND NOTIFY CITY OF SOUTH LAKE TAHOE DEPARTMENT OF PUBLIC WORKS AND EL DORADO COUNTY ENVIRONMENTAL HEALTH SERVICES HAZARDOUS MATERIALS SECTION. THE PROJECT SHALL REMAIN STOPPED UNTIL THERE IS RESOLUTION OF THE CONTAMINATION PROBLEM TO THE SATISFACTION OF ENVIRONMENTAL HEALTH SERVICES AND TO LAHONTAN REGIONAL WATER QUALITY CONTROL BOARD (RWQCB).

LEGEND

	PROPOSED CURB AND GUTTER
	FLARED END SECTION
	TREE TO BE CUT & REMOVED
1+00	DESIGN LINE AND STATION
	GRAVEL BAG CHECK DAM
	DRAIN INLET PROTECTION
	SILT FENCE
	CONSTRUCTION FENCE
T(OH) E(OH)	EXISTING OVERHEAD UTILITY
T(UG) E(UG)	EXISTING UNDERGROUND UTILITY
W	EXISTING WATER
W#	EXISTING WATER W/PIPE SIZE
G	EXISTING GAS
SS	EXISTING SEWER
D	EXISTING STORM DRAIN
6300	EXISTING INDEX CONTOUR
	EXISTING CHAIN LINK FENCE
	PROPOSED MAJOR CONTOUR
	PROPOSED MINOR CONTOUR
	PROJECT BOUNDARY
	PROPERTY BOUNDARY
	SIGN
	ROCK SLOPE PROTECTION
XX	COORDINATES DATA POINT
	BASIN OUTLET STRUCTURE
ST	SEDIMENT TRAP
	DRAIN INLET
D	STORM DRAIN MANHOLE
	SD PIPE

SURVEY LEGEND

	SURVEY CONTROL POINT	SP	SERVICE POLE
	TREE AS NOTED	TBC	TOP BACK OF CURB
6270.2	DIRT/GROUND SPOT ELEVATION	TL	TRAFFIC SIGNAL
A	ASPHALT SPOT ELEVATION	TOE	TOE OF SLOPE
AC	ASPHALT PATH	TOP	TOP OF SLOPE
BOL	BOLLARD	TMH	TELEPHONE MANHOLE
CB	CATCH BASIN	TPB	TELEPHONE PULL BOX
CLF	CHAIN LINK FENCE	VPB	CABLE PULL BOX
CMP	CORRUGATED METAL PIPE	W	WATER PAINT MARK
DI	DRAINAGE INLET	WD	WOOD FENCE
EMH	ELECTRIC MANHOLE	WF	WIRE FENCE
EP	EDGE OF PAVEMENT	WM	WATER METER
EPB	ELECTRIC PULL BOX	WSP	WOOD SIGN POST
ESW	EDGE OF SIDEWALK	WV	WATER VALVE
ETP	ELECTRIC TRANSFORMER PAD		
ETW	EDGE OF TRAVELED WAY		
FH	FIRE HYDRANT		
FL	FLOW LINE		
GA	GUY ANCHOR		
GB	GRADE BREAK		
G	GAS PAINT MARK		
GPST	GATEPOST		
GM	GAS METER		
GV	GAS VALVE		
INV	INVERT		
IV	IRRIGATION VALVE		
JP	JOINT POLE		
LIP	LIP OF GUTTER		
LUM	LIGHT POLE		
MSP	METAL SIGN POST		
MB	MAIL BOX		
M	MONITOR WELL		
PED	PEDESTRIAN SIGNAL		
PINE	PINE TREE		
RED	REDWOOD TREE		
REF	REFLECTORS		
RIS	ELECTRICAL RISER		
CO	SANITARY SEWER CLEAN OUT		
SSMH	SANITARY SEWER MANHOLE		
SS	SANITARY SEWER PAINT MARK		
SPB	TRAFFIC SIGNAL PULL BOX		

SYMBOLS

1 D-XX — DETAIL NUMBER / SHEET NUMBER

STANDARD ABBREVIATIONS

#	NUMBER	OC	ON CENTER
AB	AGGREGATE BASE	OH	OVERHEAD UTILITY
AC	ASPHALT CONCRETE	OPNG	OPENING
APPROX	APPROXIMATELY	PC	POINT OF CURVATURE
BRK	BREAK	PCC	PORTLAND CEMENT CONCRETE
BM	BENCH MARK	PERF	PERFORATED
BOS	BASIN OUTLET STRUCTURE	PH	POT HOLE (UTILITIES)
BP	BEGIN POINT	PI	POINT OF INTERSECTION
CE	CROWN ELEVATION	PIVC	POINT OF INTERSECTION VERTICAL CURVE
CET	CURB END TRANSITION	PL	PROPERTY LINE
℄	CENTERLINE	PP	POWER POLE
C&G	PCC CURB AND GUTTER	PT	POINT OF TANGENCY, POINT
CMAP	CORRUGATED METAL ARCH PIPE	PUE	PUBLIC UTILITY EASEMENT
CMP	CORRUGATED METAL PIPE	PVMT	PAVEMENT
CONC	CONCRETE	R, RAD	RADIUS
CONSTR	CONSTRUCT	RCP	REINFORCED CONCRETE PIPE
CP	CONTROL POINT	REM	REMOVE
CR	CURB RETURN	R&R	REMOVE AND REPLACE
CT	CURB TRANSITION	REQ'D	REQUIRED
CU	CUBIC YARDS	RELO	RELOCATION
DE	DRAINAGE EASEMENT	ROW	RIGHT OF WAY
DF	DOUGLAS FIR	RP	RADIUS POINT
DI	DRAIN INLET	RSP	ROCK SLOPE PROTECTION
DIA	DIAMETER	RT	RIGHT
DIP	DUCTILE IRON PIPE	R/W	RIGHT OF WAY
DR	DRIVE	RX	ROCK
E	EAST	S	SLOPE
EC	END CURVE	SD	STORM DRAIN
EG	EXISTING GROUND	SDMH	STORM DRAIN MANHOLE
EL	ELEVATION	SDV	STORM DRAIN VAULT
EP	EDGE OF PAVEMENT, END POINT	SED	SEDIMENT
ES	EACH SIDE	SEZ	STREAM ENVIRONMENT ZONE
ESA	ENVIRONMENTALLY SENSITIVE AREA	SF	SQUARE FEET
EW	EACH WAY	SHT	SHEET
EX, EXIST	EXISTING	SS	SANITARY SEWER
FES	FLARED END SECTION	SSCO	SANITARY SEWER CLEAN OUT
FG	FINISHED GRADE	SSMH	SANITARY SEWER MANHOLE
FH	FIRE HYDRANT	SSP	STANDARD SPECIAL PROVISIONS
FL	FLOW LINE	ST, SED TRAP	SEDIMENT TRAP
FM	FORCE MAIN	STA	STATION
FO	FIBER OPTIC	STD	STANDARD
FSV	FLOW SPLITTER VAULT	STH	SOUTH
GR	GRATE	SVC	SERVICE
GB	GRADE BREAK	SW	SIDEWALK
GS	GAS SERVICE	T	TANGENT LENGTH
HDPE	HIGH DENSITY POLYETHYLENE	T/	TOP OF
HORIZ	HORIZONTAL	T/P	TOP OF PIPE
HP	HIGH POINT	TBC	TOP BACK OF CURB
HW	HEADWALL	TD	TRANSVERSE DRAIN
ID	INNER DIAMETER	TEL	TELEPHONE
IE	INVERT ELEVATION	TELECOM	TELECOMMUNICATIONS
IG	INFILTRATION GALLERY	TG	TOP GRATE
IGCO	IG CLEANOUT	TP	TELEPHONE POLE
INV	INVERT	TRNSVRS	TRANSVERSE
JP	JOINT UTILITY POLE	TS	TUBE STEEL
L	LENGTH /LINE	TYP	TYPICAL
LC	LINED CHANNEL	TT	TREATMENT TYPE (REVEGETATION)
LT	LEFT	UG	UNDERGROUND UTILITY
LF	LINEAR FEET	UON	UNLESS OTHERWISE NOTED
MAX	MAXIMUM	V	VALVE
MFR	MANUFACTURER	W	WATER /WEST
MH	MANHOLE	WM	WATER MAIN, WATER METER
MIN	MINIMUM	WQF	WATER QUALITY FLOW
MUTCD	CALIFORNIA MANUAL ON UNIFORM TRAFFIC CONTROL DEVICES	WS	WATER SERVICE
MW	MONITORING WELL		
N	NORTH		
No	NUMBER		
NPS	NOMINAL PIPE SIZE		

100% BID SET

REV	DATE	DESCRIPTION	BY

WARNING
0 1/2" 1"
IF THIS BAR SCALE DOES NOT MEASURE 1" THIS DWG HAS BEEN REDUCED SCALE ACCORDINGLY

CITY OF SOUTH LAKE TAHOE
DEPARTMENT OF PUBLIC WORKS
1052 TATA LANE
SOUTH LAKE TAHOE, CA 96150
Ph: (530) 542-6030 Fax: (530) 541-7524

REGISTERED PROFESSIONAL ENGINEER No. C80207 Exp. 09/30/16 CIVIL STATE OF CALIFORNIA

CDM Smith
12313 Soaring Way, Suite 2-D
Truckee, California 96161
Tel (530) 582-7235
Fax (530) 582-1098

DESIGNED BY: RHV
DRAWN BY: OMN
SHEET CHK'D BY: RHV
CROSS CHK'D BY: SLS
DATE: MAY 8, 2015

SIERRA TRACT PH 3 & 4 EROSION CONTROL PROJECT

SHEET TITLE
NOTES, LEGEND, ABBREVIATIONS

JOB NO. 27497-93981
SCALE: AS NOTED
SHEET 3 OF 57
DWG. NO:
G-03

© 2012 CDM SMITH ALL RIGHTS RESERVED.
REUSE OF DOCUMENTS: THESE DOCUMENTS AND DESIGNS PROVIDED BY PROFESSIONAL SERVICE, INCORPORATED HEREIN, ARE THE PROPERTY OF CDM SMITH AND ARE NOT TO BE USED, IN WHOLE OR PART, FOR ANY OTHER PROJECT WITHOUT THE WRITTEN AUTHORIZATION OF CDM SMITH.

CURB AND GUTTER DATA

#	NORTHING	EASTING	DESCRIPTION
1	2104175.57	7133479.58	Back of C&G
2	2104150.57	7133511.89	Back of C&G
3	2104128.69	7133546.39	Back of C&G
4	2104124.29	7133554.30	Back of C&G
5	2104109.51	7133584.14	Back of C&G
6	2104104.13	7133598.63	Back of C&G
7	2104100.32	7133613.60	Back of C&G
8	2104025.79	7134100.56	Back of C&G
9	2104054.39	7134101.00	Back of C&G
10	2104127.30	7133626.91	Back of C&G
11	2104130.12	7133642.32	Back of C&G
12	2104136.07	7133691.89	Back of C&G
13	2104116.10	7133697.79	Back of C&G
14	2104352.03	7133935.30	Back of C&G
15	2104350.84	7133952.21	Back of C&G
16	2104373.25	7133916.52	Back of C&G
17	2104390.18	7133917.36	Back of C&G
18	2104113.28	7134162.98	Back of C&G
19	2104491.74	7133827.26	Back of C&G
20	2104121.23	7134196.29	Back of C&G

CURB AND GUTTER DATA

#	NORTHING	EASTING	DESCRIPTION
21	2104368.03	7133974.84	Back of C&G
22	2104391.33	7133976.88	Back of C&G
23	2104410.95	7133952.96	Back of C&G
24	2104233.70	7134094.25	Back of C&G
25	2104193.56	7134129.65	Back of C&G
26	2104009.51	7134292.93	Back of C&G
27	2103977.31	7134278.58	Back of C&G
28	2103941.05	7134315.80	Back of C&G
29	2104030.38	7134293.40	Back of C&G
30	2104088.43	7134180.09	Back of C&G
31	2104411.89	7133937.42	Back of C&G
32	2103831.75	7134450.65	Back of C&G
33	2103852.98	7134451.98	Back of C&G
34	2103875.40	7134411.94	Back of C&G
35	2103874.17	7134433.18	Back of C&G
36	2103696.72	7134570.45	Back of C&G
37	2103695.27	7134595.63	Back of C&G
38	2103672.20	7134612.31	Back of C&G
39	2103651.02	7134611.00	Back of C&G
40	2103573.32	7134642.06	Back of C&G

CURB AND GUTTER DATA

#	NORTHING	EASTING	DESCRIPTION
41	2103550.97	7134640.67	Back of C&G
42	2103517.20	7134729.73	Back of C&G
43	2103515.75	7134754.92	Back of C&G
44	2104105.46	7134736.54	Back of C&G
45	2104104.11	7134759.13	Back of C&G
46	2104125.69	7134716.66	Back of C&G
47	2104150.51	7134717.95	Back of C&G
48	2103969.83	7134878.27	Back of C&G
49	2103944.65	7134876.71	Back of C&G
50	2103923.46	7134895.51	Back of C&G
51	2103922.01	7134920.70	Back of C&G
52	2103790.27	7135037.50	Back of C&G
53	2103765.09	7135035.94	Back of C&G
54	2104280.53	7134602.58	Back of C&G
55	2104282.50	7134578.00	Back of C&G
56	2104326.13	7134623.92	Back of C&G
57	2104300.95	7134622.36	Back of C&G
58	2104168.28	7134740.05	Back of C&G
59	2104166.91	7134763.11	Back of C&G
60	2104146.75	7134783.08	Back of C&G

CURB AND GUTTER DATA

#	NORTHING	EASTING	DESCRIPTION
61	2104121.57	7134781.52	Back of C&G
62	2103988.64	7134899.46	Back of C&G
63	2103987.19	7134924.65	Back of C&G
64	2103965.99	7134943.45	Back of C&G
65	2103940.82	7134941.89	Back of C&G
66	2103809.12	7135058.74	Back of C&G
67	2103807.63	7135083.88	Back of C&G
68	2103786.47	7135102.73	Back of C&G
69	2103761.29	7135101.17	Back of C&G
70	2103629.59	7135218.02	Back of C&G
71	2103628.14	7135243.21	Back of C&G
72	2104131.15	7134185.02	Back of C&G
73	2104106.95	7134167.92	Back of C&G
74	2104100.04	7134172.01	Back of C&G
75	2104093.89	7134175.72	Back of C&G
76	2104509.18	7134399.74	Back of C&G
77	2104482.53	7134398.09	Back of C&G
78	2104659.57	7134233.17	Back of C&G
79	2104641.59	7134258.95	Back of C&G
80	2104639.92	7134283.74	Back of C&G

CURB AND GUTTER DATA

#	NORTHING	EASTING	DESCRIPTION
81	2104706.47	7134262.55	Back of C&G
82	2104705.02	7134287.74	Back of C&G
83	2104683.83	7134306.55	Back of C&G
84	2104658.65	7134304.99	Back of C&G
85	2104555.84	7134396.21	Back of C&G
86	2104531.08	7134420.69	Back of C&G
87	2104123.45	7135120.92	Back of C&G
88	2104142.48	7135099.68	Back of C&G
91	2104291.57	7134903.62	Back of C&G
92	2104322.06	7134558.72	Back of C&G
93	2104329.49	7134554.63	Back of C&G
96	2104965.89	7134655.88	Back of C&G
97	2104967.66	7134626.46	Back of C&G
100	2105006.45	7134608.88	Back of C&G
101	2105033.17	7134700.56	Back of C&G
102	2105283.58	7134982.80	Back of C&G
104	2105314.10	7135017.19	Back of C&G
105	2105053.48	7134677.75	Back of C&G
106	2105319.88	7134978.01	Back of C&G
107	2105316.60	7135041.86	Back of C&G

CURB AND GUTTER DATA

#	NORTHING	EASTING	DESCRIPTION
108	2105335.87	7135068.61	Back of C&G
109	2105158.40	7135226.07	Back of C&G
110	2105180.76	7135227.25	Back of C&G
111	2105375.75	7135447.02	Back of C&G
112	2105383.59	7135455.85	Back of C&G
113	2105433.09	7135511.65	Back of C&G
114	2105431.61	7135534.01	Back of C&G
115	2105296.82	7135653.60	Back of C&G
116	2105279.18	7135655.96	Back of C&G
117	2105311.18	7135692.02	Back of C&G
118	2105315.63	7135674.79	Back of C&G
119	2105450.42	7135555.20	Back of C&G
120	2105472.83	7135556.43	Back of C&G
121	2105734.70	7135851.59	Back of C&G
122	2105742.76	7135817.98	Back of C&G
123	2105760.24	7135811.34	Back of C&G
124	2105748.07	7135340.56	Back of C&G
125	2105710.65	7135324.31	Back of C&G
126	2105495.47	7135515.22	Back of C&G
127	2105493.99	7135537.59	Back of C&G

CURB AND GUTTER DATA

#	NORTHING	EASTING	DESCRIPTION
128	2105361.05	7135070.11	Back of C&G
129	2105611.97	7135352.92	Back of C&G
130	2105610.50	7135375.29	Back of C&G
131	2105476.66	7135494.03	Back of C&G
132	2105454.28	7135492.84	Back of C&G
133	2105232.20	7135242.53	Back of C&G
134	2105224.36	7135233.70	Back of C&G
135	2105204.13	7135210.90	Back of C&G
136	2105548.47	7135599.00	Back of C&G
137	2105205.73	7135184.07	Back of C&G
140	2105786.70	7135738.32	Back of C&G
141	2105410.23	7135078.60	Back of C&G
142	2105627.66	7135323.90	Back of C&G
143	2104195.47	7134128.38	Back of C&G
144	2105556.30	7135607.83	Back of C&G
148	2103908.23	7134514.25	Back of C&G
149	2103916.06	7134523.08	Back of C&G
150	2103923.11	7134488.34	Back of C&G
151	2103939.04	7134506.29	Back of C&G
152	2104178.14	7133473.98	Back of C&G
154	2104978.93	7134596.46	Back of C&G
155	2104108.32	7134207.85	Back of C&G
156	2104058.81	7134251.80	Back of C&G
157	2104056.02	7134275.68	Back of C&G
158	2104235.44	7134092.48	Back of C&G
160	2104715.98	7134254.12	Back of C&G

CURB AND GUTTER DATA

#	NORTHING	EASTING	DESCRIPTION
162	2103993.04	7134265.10	Back of C&G
163	2104785.82	7134783.03	Back of C&G
164	2104789.66	7134811.53	Back of C&G
165	2104829.82	7134855.38	Back of C&G
166	2104848.69	7134855.71	Back of C&G
167	2104046.31	7134172.95	Back of C&G
168	2104012.90	7134167.63	Back of C&G
169	2104659.24	7134927.91	Back of C&G
170	2104633.07	7134927.12	Back of C&G
171	2104061.79	7133865.35	Back of C&G
172	2104084.63	7133903.43	Back of C&G
173	2105919.53	7135009.37	Back of C&G
174	2105902.29	7135030.50	Back of C&G
175	2105887.57	7135053.46	Back of C&G
176	2105874.19	7135083.33	Back of C&G
177	2105863.14	7135114.15	Back of C&G
178	2105848.27	7135143.24	Back of C&G
179	2105841.14	7135153.40	Back of C&G
180	2105833.57	7135163.23	Back of C&G
181	2106136.61	7135229.03	Back of C&G
182	2106002.37	7135345.63	Back of C&G
183	2104116.61	7133569.08	Back of C&G

DRAIN STRUCTURE DATA

#	NORTHING	EASTING	DESCRIPTION
300	2104066.62	7133394.34	48" SDMH
301	2104103.54	7133482.82	IG LIMIT OF GB
302	2104139.90	7133503.85	IG LIMIT OF GB
303	2104102.35	7133568.77	IG LIMIT OF GB
304	2104065.99	7133547.74	IG LIMIT OF GB
305	2104105.73	7133491.02	RIVER IG
306	2104100.16	7133560.58	RIVER IG
307	2104111.89	7133567.37	SED. TRAP (6')
308	2104106.70	7133564.36	SED. TRAP (6')
309	2104117.38	7133591.29	48" SDMH
310	2104114.78	7133650.30	72" SDMH
311	2104128.64	7133643.50	DI TYPE 2
312	2104123.71	7133686.67	DI TYPE 1
313	2104385.12	7133956.82	48" SDMH
314	2104376.69	7133969.37	DI TYPE 1
315	2104406.57	7133942.97	DI TYPE 2
316	2104655.29	7134261.20	48" SDMH
317	2104647.58	7134268.09	DI TYPE 1
318	2104676.02	7134242.42	EX DRAIN INLET
319	2104677.01	7134285.75	48" SDMH

DRAIN STRUCTURE DATA

#	NORTHING	EASTING	DESCRIPTION
320	2104670.01	7134298.63	DI TYPE 1
321	2104699.28	7134270.75	DI TYPE 2
322	2104513.45	7134397.73	DI TYPE 1
323	2104533.45	7134416.48	DI TYPE 1
324	2104473.85	7134469.05	DI TYPE 1
325	2104794.82	7134794.53	DI TYPE 2
326	2104656.69	7134728.73	EARTHEN BAFFLE
327	2104690.28	7134776.52	EARTHEN BAFFLE
328	2104639.34	7134933.36	DI TYPE 2
329	2104637.73	7134943.46	72" SDMH
330	2104611.09	7134946.43	SED. TRAP (6')
331	2104498.02	7134785.94	48" SDMH
332	2104502.03	7134782.38	DI TYPE 2
333	2104477.56	7134796.26	DI TYPE 2
334	2104453.20	7134735.48	48" SDMH
335	2104510.32	7134683.66	FES
336	2104462.82	7134583.91	60" SDMH
337	2104455.25	7134594.29	FES
338	2104199.02	7134801.31	DI TYPE 1
339	2104173.76	7134772.85	DI TYPE 2

DRAIN STRUCTURE DATA

#	NORTHING	EASTING	DESCRIPTION
340	2104154.98	7134757.61	48" SDMH
341	2104134.66	7134774.92	DI TYPE 1
342	2104985.66	7134633.61	48" SDMH
343	2104817.33	7134783.19	48" SDMH
344	2103931.95	7134496.54	DI TYPE 2
345	2103908.64	7134517.22	SED. TRAP (8')
346	2103868.45	7134423.17	DI TYPE 1
347	2103855.59	7134419.81	72" SDMH
348	2103848.36	7134454.39	SED. TRAP (6')
349	2105327.59	7135036.00	48" SDMH
350	2103907.09	7134388.63	SED. TRAP (6')
351	2103911.57	7134384.64	SED. TRAP (6')
352	2103951.26	7134391.94	LODI IG CO
353	2103925.04	7134372.70	SED. TRAP (6')
354	2103984.39	7134383.61	LODI IG CO
355	2103938.32	7134360.55	SED. TRAP (6')
356	2103987.84	7134369.65	LODI IG CO
357	2103930.16	7134351.35	48" SDMH
358	2104000.35	7134288.98	48" SDMH
359	2104005.50	7134294.76	DI TYPE 2

DRAIN STRUCTURE DATA

#	NORTHING	EASTING	DESCRIPTION
360	2103976.57	7134273.80	HEADWALL
361	2103836.39	7134436.89	48" SDMH
362	2103841.71	7134444.99	DI TYPE 2
363	2103786.21	7134481.41	48" SDMH
364	2103891.69	7134387.71	48" SDMH
365	2103729.93	7134453.45	BOS
366	2103721.69	7134464.67	FES
367	2103733.44	7134498.52	DI TYPE 1 w/TD
368	2103751.80	7134511.94	48" SDMH
369	2103662.43	7134591.23	48" SDMH
370	2103660.95	7134605.34	DI TYPE 1
371	2103799.38	7134742.74	48" SDMH
372	2103791.72	7134749.54	SED. TRAP (6')
373	2103770.53	7134463.74	SED. TRAP (8')
374	2104761.29	7134833.87	48" SDMH
375	2103957.30	7134920.73	48" SDMH
376	2103953.89	7134935.56	DI TYPE 1
377	2103980.80	7134911.69	DI TYPE 1
380	2104045.10	7135033.36	DI TYPE 1
381	2104097.98	7135051.46	DI TYPE 1

100% BID SET

REV	DATE	DESCRIPTION	BY

WARNING
0 1/2" 1"
IF THIS BAR SCALE DOES NOT MEASURE 1" THIS DWG HAS BEEN REDUCED SCALE ACCORDINGLY

CITY OF SOUTH LAKE TAHOE
DEPARTMENT OF PUBLIC WORKS
1052 TATA LANE
SOUTH LAKE TAHOE, CA 96150
Ph: (530) 542-6030 Fax: (530) 541-7524

REGISTERED PROFESSIONAL ENGINEER No. C80207 Exp. 09/30/16 CIVIL STATE OF CALIFORNIA

CDM Smith
12313 Soaring Way, Suite 2-D
Truckee, California 96161
Tel (530) 582-7235
Fax (530) 582-1098

DESIGNED BY: RHV
DRAWN BY: OMN
SHEET CHK'D BY: RHV
CROSS CHK'D BY: SLS
DATE: MAY 8, 2015

SIERRA TRACT PH 3 & 4 EROSION CONTROL PROJECT
SHEET TITLE
POINT DATA 1

JOB NO. 27497-93981
SCALE: AS NOTED
SHEET 4 OF 57
DWG. NO:
G-04

© 2012 CDM SMITH ALL RIGHTS RESERVED.
REUSE OF DOCUMENTS: THESE DOCUMENTS AND DESIGNS PROVIDED BY PROFESSIONAL SERVICE, INCORPORATED HEREIN, ARE THE PROPERTY OF CDM SMITH AND ARE NOT TO BE USED, IN WHOLE OR PART, FOR ANY OTHER PROJECT WITHOUT THE WRITTEN AUTHORIZATION OF CDM SMITH.

DRAIN STRUCTURE DATA

#	NORTHING	EASTING	DESCRIPTION
382	2103800.97	7135070.91	DI TYPE 1
383	2103774.32	7135094.84	DI TYPE 1
391	2103670.16	7134614.20	SED. TRAP (8')
392	2104990.11	7134603.37	DI TYPE 2
393	2104972.81	7134619.12	48" SDMH
394	2104967.17	7134623.95	DI TYPE 1
396	2105288.50	7134990.87	SED. TRAP (6')
397	2105311.20	7135017.14	SED. TRAP (6')
398	2105346.09	7135057.28	60" SDMH
399	2105355.90	7135007.90	DI TYPE G1
400	2105392.19	7134976.81	DI TYPE G2
401	2105378.32	7135044.71	DI TYPE 1
402	2105541.45	7135229.36	DI TYPE 1
403	2105536.84	7135233.32	48" SDMH
404	2105639.31	7135348.64	48" SDMH
405	2105617.43	7135366.66	DI TYPE 2
406	2105652.64	7135363.51	48" SDMH
407	2105320.17	7135038.39	DI TYPE 1
408	2105281.42	7135119.15	SED. TRAP (8')
409	2105215.34	7135181.02	SED. TRAP (8')

DRAIN STRUCTURE DATA

#	NORTHING	EASTING	DESCRIPTION
410	2105171.13	7135180.05	60" SDMH
411	2105364.12	7135077.64	SED. TRAP (6')
412	2105660.52	7135372.30	SED. TRAP (8')
413	2105732.82	7135309.09	48" SDMH
414	2105735.30	7135318.76	DI TYPE 1
415	2105776.33	7135287.69	DI TYPE G2
416	2105780.00	7135414.77	SED. TRAP (8')
417	2105785.45	7135580.29	SED. TRAP (10')
418	2105781.45	7135587.02	DI TYPE 1
419	2105753.19	7135581.22	DI TYPE 1
420	2105528.13	7135620.43	DI TYPE 2
421	2104394.34	7134507.42	72" SDMH
422	2105551.37	7135599.76	SED. TRAP (8')
423	2105494.42	7135534.31	SED. TRAP (6')
424	2105488.73	7135527.16	DI TYPE G4
425	2105496.22	7135517.84	SED. TRAP' (8')
427	2105461.95	7135549.33	DI TYPE 1
428	2105461.10	7135507.86	48" SDMH
429	2105465.11	7135499.90	DI TYPE 1
430	2105438.31	7135523.22	DI TYPE G4

DRAIN STRUCTURE DATA

#	NORTHING	EASTING	DESCRIPTION
431	2105376.16	7135450.00	SED. TRAP (6')
432	2105227.27	7135234.46	SED. TRAP (6')
433	2105197.48	7135197.03	DI TYPE 1
434	2105195.29	7135186.37	48" SDMH
435	2105171.69	7135220.39	DI TYPE 1
436	2105175.67	7135165.37	DI TYPE 1
437	2105036.00	7135029.36	48" SDMH
438	2105831.37	7135167.51	DI TYPE 1
439	2105849.90	7135181.03	60" SDMH
441	2105855.52	7135195.26	DI TYPE 1
442	2105885.93	7135136.44	60" SDMH
443	2105977.37	7135321.14	DI TYPE G1
444	2106065.25	7135247.10	DI TYPE G1
445	2106085.99	7135270.52	DI TYPE 1
446	2104237.97	7134088.50	DI TYPE 1
447	2104189.32	7134131.69	DI TYPE 1
448	2105626.45	7135401.24	SED. TRAP (6')
449	2105574.21	7135447.81	SED. TRAP (8')
450	2105554.01	7135465.51	SED. TRAP (8')
451	2104090.65	7133373.00	48" SDMH

DRAIN STRUCTURE DATA

#	NORTHING	EASTING	DESCRIPTION
452	2106019.73	7135072.96	AC SWALE
453	2106114.86	7135203.33	AC SWALE
454	2105955.95	7135340.09	AC SWALE
470	2103734.44	7134492.42	SED. TRAP (8')
471	2103991.66	7134366.29	IG LIMIT OF GB
472	2103990.22	7134374.15	IG LIMIT OF GB
473	2103988.22	7134380.25	IG LIMIT OF GB
474	2103986.77	7134388.12	IG LIMIT OF GB
475	2103955.08	7134388.58	IG LIMIT OF GB
476	2103953.63	7134396.44	IG LIMIT OF GB
477	2105202.78	7135205.19	SED. TRAP (6')
478	2104045.80	7134207.83	DI TYPE 2 w/TD
479	2103974.93	7134282.70	DI TYPE 2 w/TD
480	2103697.65	7134645.15	SED. TRAP (6')
482	2103755.74	7134516.36	DI TYPE 1
494	2104612.36	7134715.44	FES
496	2104865.25	7134835.32	60" SDMH
497	2104870.61	7134833.16	EX DRAIN INLET
498	2104736.32	7134684.79	EX DRAIN INLET
499	2104716.13	7134701.85	EX DRAIN INLET

DRAIN STRUCTURE DATA

#	NORTHING	EASTING	DESCRIPTION
500	2104687.36	7134727.10	FES
501	2106116.10	7135173.80	AC SWALE
502	2105039.49	7135025.99	EX DRAIN INLET
503	2105019.60	7135044.25	EX DRAIN INLET
504	2105371.68	7135047.43	60" SDMH
505	2104037.36	7134269.04	72" SDMH
506	2104050.83	7134265.29	DI TYPE GT3
507	2104313.98	7134616.03	DI TYPE 2
508	2104309.16	7134572.86	72" SDMH
509	2104279.92	7134572.31	EX DRAIN INLET
510	2104391.26	7134501.67	DI TYPE 2
512	2104579.13	7134715.01	EX SDMH
513	2104112.43	7134791.85	SED. TRAP (8')
514	2104094.11	7134769.73	DI TYPE 1 w/TD
516	2104410.49	7134525.41	72" SDMH
517	2103924.63	7134957.81	SED. TRAP (8')
518	2103832.12	7135040.56	SED. TRAP (6')
520	2104074.19	7133545.55	RIVER IG
521	2104127.62	7133550.97	DI TYPE 1
522	2104349.99	7133931.05	DI TYPE 1

DRAIN STRUCTURE DATA

#	NORTHING	EASTING	DESCRIPTION
523	2104368.80	7133914.36	DI TYPE 2
524	2104356.99	7133924.85	48" SDMH
525	2104549.33	7134111.78	DI TYPE 2
526	2104534.33	7134124.99	48" SDMH
527	2104528.87	7134129.89	DI TYPE 1
528	2104848.55	7134452.37	DI TYPE 2
529	2104829.77	7134469.03	DI TYPE 1
530	2104835.35	7134464.19	48" SDMH
531	2105188.34	7134829.24	DI TYPE G1
532	2105166.32	7134848.63	DI TYPE 1
533	2105172.03	7134843.68	48" SDMH
534	2105312.74	7134968.30	DI TYPE 2
535	2105295.96	7134984.27	48" SDMH
536	2105411.40	7135128.52	DI TYPE 1
537	2105548.18	7135223.98	EX DRAIN INLET
542	2104768.74	7134795.99	FES
545	2104404.06	7134680.16	48" SDMH
546	2104387.55	7134694.81	DI TYPE 2
547	2103977.36	7134269.35	HEADWALL
548	2104843.73	7134857.55	SDV

DRAIN STRUCTURE DATA

#	NORTHING	EASTING	DESCRIPTION
547	2103977.36	7134269.35	HEADWALL
548	2104843.73	7134857.55	SDV
549	2104837.00	7134863.52	SDV
550	2104840.41	7134853.81	SDV
551	2104833.68	7134859.78	SDV
552	2104785.74	7134792.16	FSV
553	2104790.36	7134797.42	FSV
554	2104783.59	7134803.35	FSV
555	2104778.98	7134798.09	FSV
556	2104634.07	7134713.21	ROCK CHECK DAM
557	2104626.01	7134685.12	ROCK CHECK DAM
558	2104621.54	7134736.51	ROCK CHECK DAM
559	2103730.85	7134495.61	SED. TRAP (8')
561	2103905.91	7134936.71	DI TYPE 1 w/TD
562	2106075.11	7135258.83	60" SDMH
563	2105989.55	7135334.92	60" SDMH
564	2104517.75	7134429.57	60" SDMH
565	2104419.01	7134518.24	DI TYPE 2 w/TD
566	2104403.14	7134532.56	DI TYPE 2 w/TD
567	2104131.70	7133506.04	RIVER IG
568	2104826.59	7134854.91	EX DRAIN INLET
569	2103973.44	7134274.22	HEADWALL
570	2104171.13	7134416.77	EX SDMH

CHRIS AVE BASIN DATA

#	NORTHING	EASTING	DESCRIPTION	ELEVATION
951	2104690.19	7134792.76	CONTOUR ADJUSTMENT	6245.00
952	2104706.78	7134805.05	CONTOUR ADJUSTMENT	6245.00
953	2104718.88	7134814.01	CONTOUR ADJUSTMENT	6245.00
954	2104739.85	7134810.64	CONTOUR ADJUSTMENT	6245.00
955	2104746.04	7134800.75	CONTOUR ADJUSTMENT	6245.00
956	2104739.36	7134793.72	CONTOUR ADJUSTMENT	6245.00
957	2104718.06	7134784.82	CONTOUR ADJUSTMENT	6245.00
958	2104705.33	7134777.53	CONTOUR ADJUSTMENT	6245.00
959	2104692.62	7134760.14	CONTOUR ADJUSTMENT	6245.00
960	2104687.89	7134740.23	CONTOUR ADJUSTMENT	6245.00
961	2104670.36	7134726.39	CONTOUR ADJUSTMENT	6245.00
962	2104657.41	7134747.18	CONTOUR ADJUSTMENT	6245.00
963	2104675.78	7134774.65	CONTOUR ADJUSTMENT	6244.00
964	2104649.18	7134690.56	CONTOUR ADJUSTMENT	6243.00
965	2104613.48	7134723.94	CONTOUR ADJUSTMENT	6243.00
966	2104613.68	7134702.45	CONTOUR ADJUSTMENT	6243.00
967	2104686.25	7134795.79	CONTOUR ADJUSTMENT	6244.00
968	2104715.42	7134818.92	CONTOUR ADJUSTMENT	6244.00
969	2104739.02	7134823.72	CONTOUR ADJUSTMENT	6245.00
970	2104733.57	7134770.90	CONTOUR ADJUSTMENT	6245.00
971	2104748.89	7134768.82	CONTOUR ADJUSTMENT	6246.00
972	2104663.50	7134707.32	CONTOUR ADJUSTMENT	6244.00
973	2104698.34	7134754.53	CONTOUR ADJUSTMENT	6244.00

LODI AVE BASIN DATA

#	NORTHING	EASTING	DESCRIPTION	ELEVATION
850	2103722.44	7134434.15	TOP	6257.00
851	2103715.19	7134428.61	TOP	6257.00
852	2103704.61	7134430.15	TOP	6257.00
853	2103693.02	7134455.37	TOP	6261.00
854	2103701.35	7134463.85	TOP	6261.00
855	2103710.78	7134472.38	TOP	6261.00
856	2103729.12	7134476.23	MATCH EXISTING	6261.00
857	2103737.13	7134467.09	MATCH EXISTING	6260.00
858	2103744.05	7134458.66	MATCH EXISTING	6259.00
859	2103752.56	7134448.93	TOP	6257.00
860	2103751.93	7134446.08	TOP	6257.00
861	2103736.89	7134444.73	TOP	6257.00
862	2103731.17	7134443.32	TOP	6257.00
863	2103717.77	7134457.82	FLOW LINE	6253.99
864	2103708.92	7134447.18	FLOW LINE	6253.96
865	2103709.19	7134441.88	FLOW LINE	6253.96
866	2103713.40	7134441.34	FLOW LINE	6253.94
867	2103718.86	7134447.33	FLOW LINE	6253.95
868	2103727.90	7134453.25	FLOW LINE	6253.90
869	2103695.90	7134436.64	MATCH EXISTING	6259.00
870	2103691.91	7134446.73	MATCH EXISTING	6260.00

WILLIAM AVE BASIN DATA

#	NORTHING	EASTING	DESCRIPTION	ELEVATION
900	2104433.77	7134601.13	MATCH EXISTING	6245.00
901	2104437.43	7134616.66	TOP	6245.00
902	2104445.20	7134632.06	TOP	6245.00
903	2104450.31	7134646.24	TOP	6245.00
904	2104455.23	7134661.13	TOP	6247.00
905	2104465.55	7134666.42	TOP	6245.00
906	2104473.84	7134671.93	TOP	6247.00
907	2104491.42	7134680.62	TOP	6247.00
908	2104502.51	7134686.92	TOP	6247.00
909	2104526.66	7134683.40	TOP	6247.00
910	2104514.50	7134692.93	TOP	6245.00
911	2104522.67	7134661.61	TOP	6247.00
912	2104519.17	7134654.16	MATCH EXISTING	6245.00
913	2104512.50	7134680.21	FLOWLINE	6245.00
914	2104507.44	7134671.03	FLOWLINE	6243.98
915	2104495.38	7134665.92	FLOWLINE	6243.93
916	2104489.11	7134659.02	FLOWLINE	6243.90
917	2104486.19	7134646.02	FLOWLINE	6243.84
918	2104478.46	7134639.70	FLOWLINE	6243.79
919	2104471.14	7134638.58	FLOWLINE	6243.77

WILLIAM AVE BASIN DATA

#	NORTHING	EASTING	DESCRIPTION	ELEVATION
920	2104465.88	7134632.37	FLOWLINE	6243.73
921	2104464.41	7134618.91	FLOWLINE	6243.69
922	2104458.61	7134607.17	FLOWLINE	6245.00
923	2104488.58	7134626.44	TOP	6246.00
924	2104485.63	7134621.57	TOP	6245.00
925	2104513.08	7134652.12	TOP	6245.00
926	2104498.07	7134631.03	TOP	6246.00
927	2104479.00	7134609.78	TOP	6245.00
928	2104472.07	7134601.99	TOP	6246.00
929	2104463.56	7134593.73	TOP	6246.00
930	2104447.37	7134591.69	TOP	6246.00
931	2104493.90	7134658.65	EARTHEN BAFFLE	6245.00
932	2104472.60	7134633.95	EARTHEN BAFFLE	6245.00
933	2104459.25	7134613.54	EARTHEN BAFFLE	6245.00
934	2104481.00	7134646.42	EARTHEN BAFFLE	6245.00

MISC. DATA

#	NORTHING	EASTING	DESCRIPTION
750	2104373.83	7133911.24	PARKING BARIER
751	2104315.43	7133845.42	PARKING BARIER
752	2104161.11	7133475.17	IG LIMIT OF GB
753	2104114.96	7133554.94	IG LIMIT OF GB
754	2104113.46	7133557.54	IG LIMIT OF GB
755	2104100.84	7133579.37	IG LIMIT OF GB

100% BID SET

REV	DATE	DESCRIPTION	BY

WARNING
0 1/2" 1"
IF THIS BAR SCALE DOES NOT MEASURE 1" THIS DWG HAS BEEN REDUCED SCALE ACCORDINGLY

CITY OF SOUTH LAKE TAHOE
DEPARTMENT OF PUBLIC WORKS
1052 TATA LANE
SOUTH LAKE TAHOE, CA 96150
Ph: (530) 542-6030 Fax: (530) 541-7524

REGISTERED PROFESSIONAL ENGINEER No. C80207 Exp. 09/30/16 CIVIL STATE OF CALIFORNIA

CDM Smith
12313 Soaring Way, Suite 2-D
Truckee, California 96161
Tel (530) 582-7235
Fax (530) 582-1098

DESIGNED BY: RHV
DRAWN BY: OMN
SHEET CHK'D BY: RHV
CROSS CHK'D BY: SLS
DATE: MAY 8, 2015

SIERRA TRACT PH 3 & 4 EROSION CONTROL PROJECT
SHEET TITLE
POINT DATA 2

JOB NO. 27497-93981
SCALE: AS NOTED
SHEET 5 OF 57
DWG. NO:
G-05

© 2012 CDM SMITH ALL RIGHTS RESERVED.
REUSE OF DOCUMENTS: THESE DOCUMENTS AND DESIGNS PROVIDED BY PROFESSIONAL SERVICE, INCORPORATED HEREIN, ARE THE PROPERTY OF CDM SMITH AND ARE NOT TO BE USED, IN WHOLE OR PART, FOR ANY OTHER PROJECT WITHOUT THE WRITTEN AUTHORIZATION OF CDM SMITH.

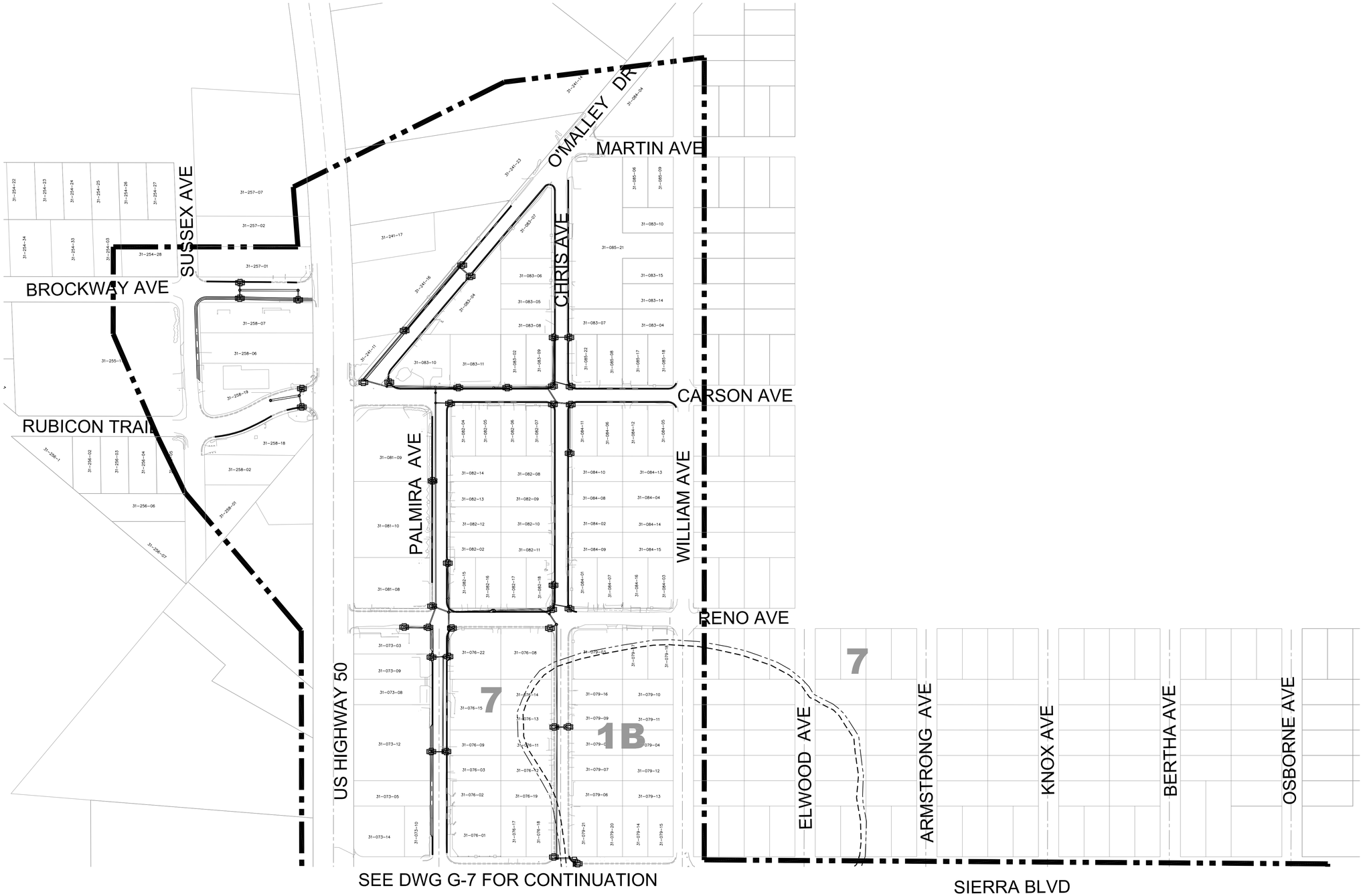

LEGEND

- GRAVEL BAG CHECK DAM
- DRAIN INLET PROTECTION
- SILT FENCE
- CONSTRUCTION FENCE
- STAGING AREA
- SEZ BOUNDARY
- SEZ SETBACK
- 7 LAND CAPABILITY

1" = 100'

50 0 100

100% BID SET

REV	DATE	DESCRIPTION	BY

WARNING

0 1/2" 1"

IF THIS BAR SCALE DOES NOT MEASURE 1" THIS DWG HAS BEEN REDUCED SCALE ACCORDINGLY

CITY OF SOUTH LAKE TAHOE

DEPARTMENT OF PUBLIC WORKS

1052 TATA LANE
SOUTH LAKE TAHOE, CA 96150
Ph: (530) 542-6030 Fax: (530) 541-7524

REGISTERED PROFESSIONAL ENGINEER
No. C80207
Exp. 09/30/16
CIVIL
STATE OF CALIFORNIA

CDM Smith

12313 Soaring Way, Suite 2-D
Truckee, California 96161
Tel (530) 582-7235
Fax (530) 582-1098

DESIGNED BY: RHV
DRAWN BY: OMN
SHEET CHK'D BY: RHV
CROSS CHK'D BY: SLS
DATE: FEBRUARY 20, 2015

SIERRA TRACT PH 3 & 4 EROSION CONTROL PROJECT

SHEET TITLE

WATER POLLUTION CONTROL PLAN 1

JOB NO. 27497-93981
SCALE: AS NOTED
SHEET 6 OF 57
DWG. NO:
G-06

© 2012 CDM SMITH ALL RIGHTS RESERVED.
REUSE OF DOCUMENTS: THESE DOCUMENTS AND DESIGNS PROVIDED BY PROFESSIONAL SERVICE, INCORPORATED HEREIN, ARE THE PROPERTY OF CDM SMITH AND ARE NOT TO BE USED, IN WHOLE OR PART, FOR ANY OTHER PROJECT WITHOUT THE WRITTEN AUTHORIZATION OF CDM SMITH.

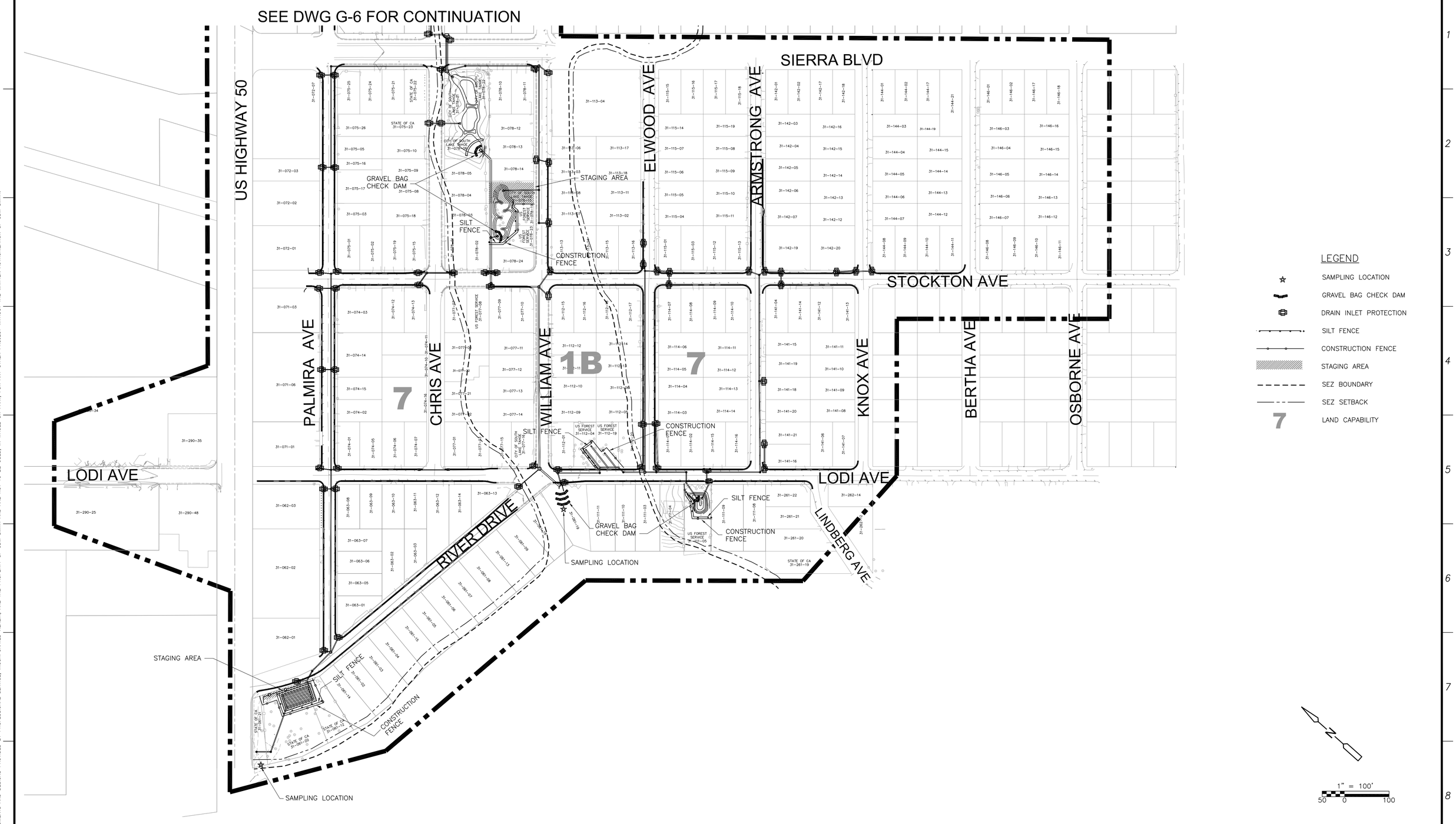

100% BID SET

REV	DATE	DESCRIPTION	BY

WARNING
0 1/2" 1"
IF THIS BAR SCALE DOES NOT MEASURE 1" THIS DWG HAS BEEN REDUCED SCALE ACCORDINGLY

CITY OF SOUTH LAKE TAHOE
DEPARTMENT OF PUBLIC WORKS
1052 TATA LANE
SOUTH LAKE TAHOE, CA 96150
Ph: (530) 542-6030 Fax: (530) 541-7524

REGISTERED PROFESSIONAL ENGINEER No. C80207 Exp. 09/30/16 CIVIL STATE OF CALIFORNIA

CDM Smith
12313 Soaring Way, Suite 2-D
Truckee, California 96161
Tel (530) 582-7235
Fax (530) 582-1098

DESIGNED BY: RHV
DRAWN BY: OMN
SHEET CHK'D BY: RHV
CROSS CHK'D BY: SLS
DATE: FEBRUARY 20, 2015

SIERRA TRACT PH 3 & 4 EROSION CONTROL PROJECT
SHEET TITLE
WATER POLLUTION CONTROL PLAN 2

JOB NO. 27497-93981
SCALE: AS NOTED
SHEET 7 OF 57
DWG. NO:
G-07

© 2012 CDM SMITH ALL RIGHTS RESERVED.
REUSE OF DOCUMENTS: THESE DOCUMENTS AND DESIGNS PROVIDED BY PROFESSIONAL SERVICE, INCORPORATED HEREIN, ARE THE PROPERTY OF CDM SMITH AND ARE NOT TO BE USED, IN WHOLE OR PART, FOR ANY OTHER PROJECT WITHOUT THE WRITTEN AUTHORIZATION OF CDM SMITH.

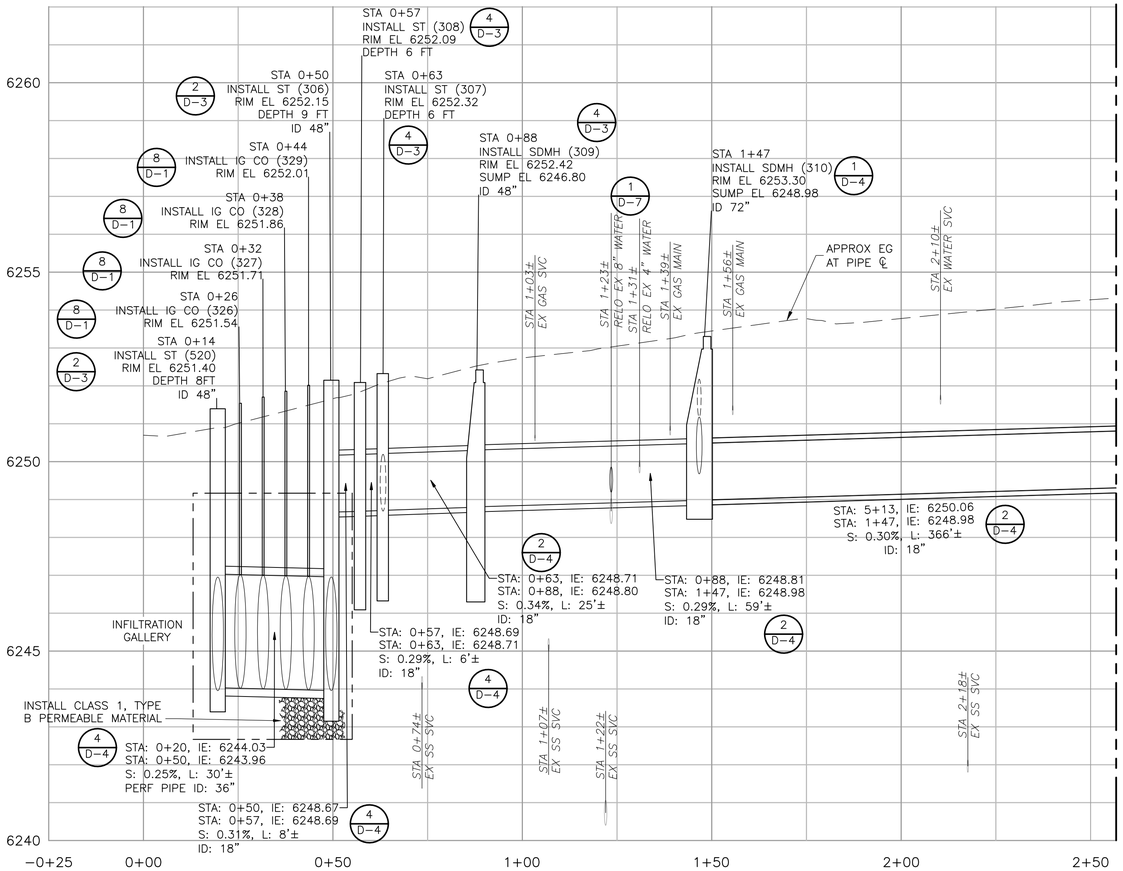

PALMIRA - (1)

MATCH LINE – SEE DWG C-2

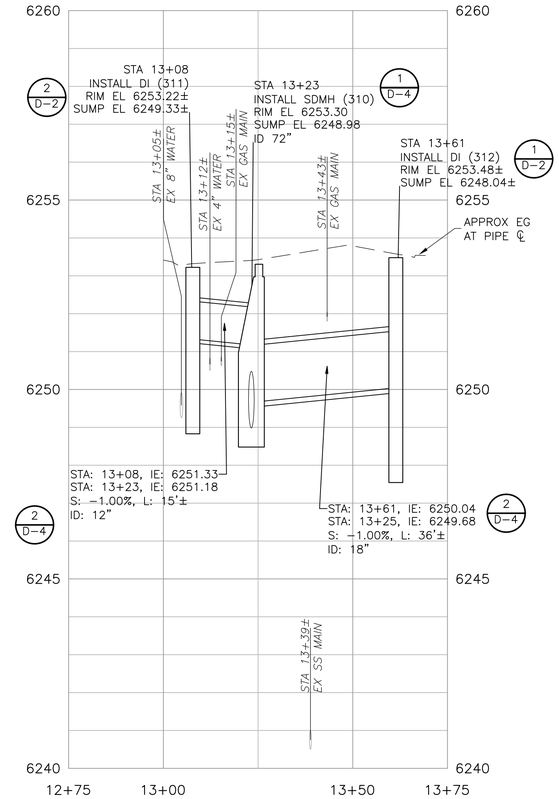

PALMIRA - (2)

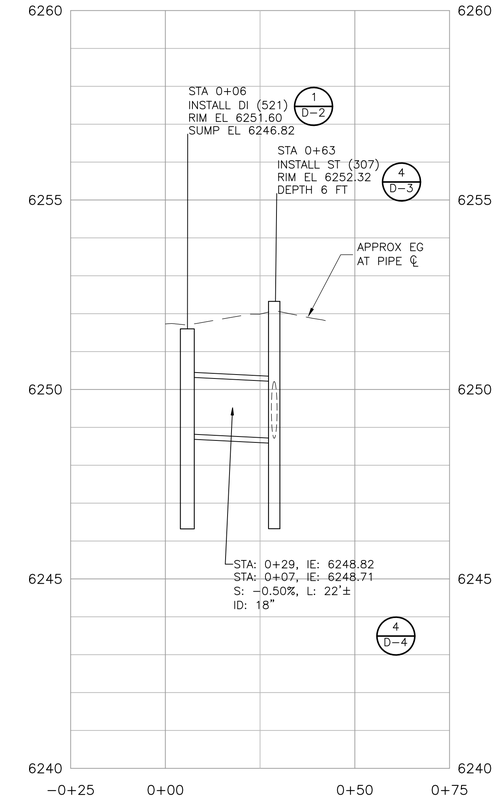

RIVER - (1)

PROFILE SCALES
HORIZ: 1"=20'
VERT: 1"=2'

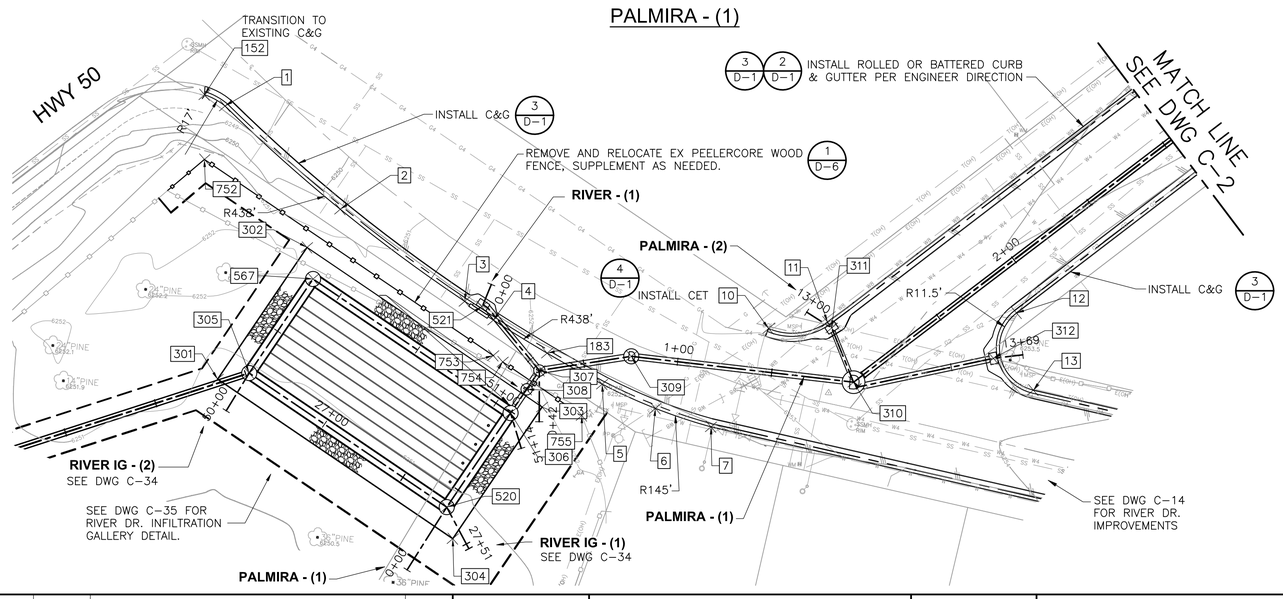

PALMIRA AVE

PLAN

NOTES:

1. INSTALL CURB DRIVEWAY TRANSITIONS AT ALL DRIVEWAY CROSSINGS UNLESS OTHERWISE INDICATED ON THE PLANS. (5/D-1)
2. INSTALL CURB END TRANSITIONS AT TERMINATIONS OF ALL NEW CURB AND GUTTER SECTIONS. (4/D-1)
3. INSTALL CURB CORNER TRANSITIONS IN ALL LOCATIONS WHERE NEW CURB AND GUTTER CONTINUES AROUND STREET CORNERS. (7/D-1)
4. MATCH EXISTING TOP BACK OF CURB, MATCH FLOW LINE, AND INSTALL COLD JOINT TIE-INS WHEN TRANSITIONING TO EXISTING CURB AND GUTTER OR DRIVEWAYS.
5. # SEE SHEETS G-4 & G-5 FOR DATA POINT TABLES.

N

1" = 20'
10 0 20

100% BID SET

REV	DATE	DESCRIPTION	BY

WARNING
0 1/2" 1"
IF THIS BAR SCALE DOES NOT MEASURE 1" THIS DWG HAS BEEN REDUCED SCALE ACCORDINGLY

CITY OF SOUTH LAKE TAHOE
DEPARTMENT OF PUBLIC WORKS
1052 TATA LANE
SOUTH LAKE TAHOE, CA 96150
Ph: (530) 542-6030 Fax: (530) 541-7524

REGISTERED PROFESSIONAL ENGINEER No. C80207 Exp. 09/30/16 CIVIL STATE OF CALIFORNIA

CDM Smith
12313 Soaring Way, Suite 2-D
Truckee, California 96161
Tel (530) 582-7235
Fax (530) 582-1098

DESIGNED BY: RHV
DRAWN BY: OMN
SHEET CHK'D BY: RHV
CROSS CHK'D BY: SLS
DATE: MAY 8, 2015

SIERRA TRACT PH 3 & 4 EROSION CONTROL PROJECT

SHEET TITLE
PALMIRA AVE PLAN AND PROFILE

JOB NO. 27497-93981
SCALE: AS NOTED
SHEET 8 OF 57
DWG. NO:
C-01

© 2012 CDM SMITH ALL RIGHTS RESERVED.
REUSE OF DOCUMENTS: THESE DOCUMENTS AND DESIGNS PROVIDED BY PROFESSIONAL SERVICE, INCORPORATED HEREIN, ARE THE PROPERTY OF CDM SMITH AND ARE NOT TO BE USED, IN WHOLE OR PART, FOR ANY OTHER PROJECT WITHOUT THE WRITTEN AUTHORIZATION OF CDM SMITH.

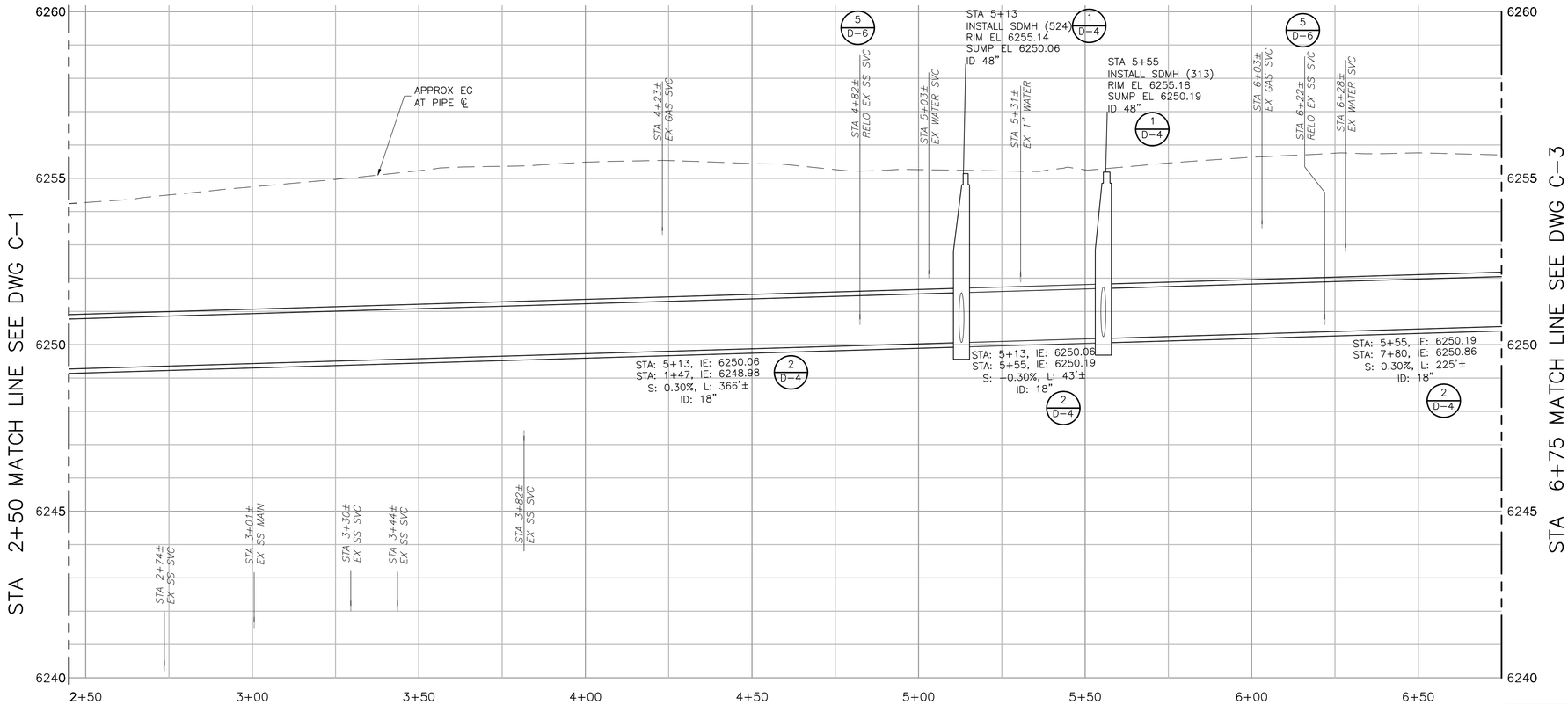

PALMIRA - (1)

PROFILE SCALES
HORIZ: 1"=20'
VERT: 1"=2'

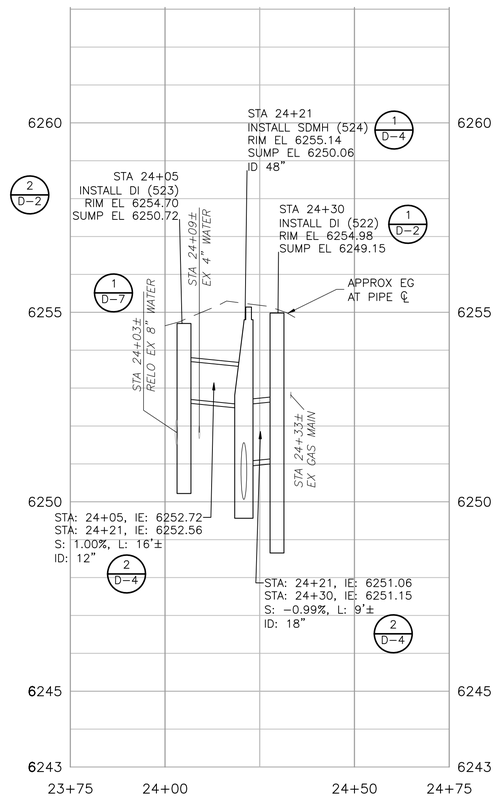

PALMIRA - (7)

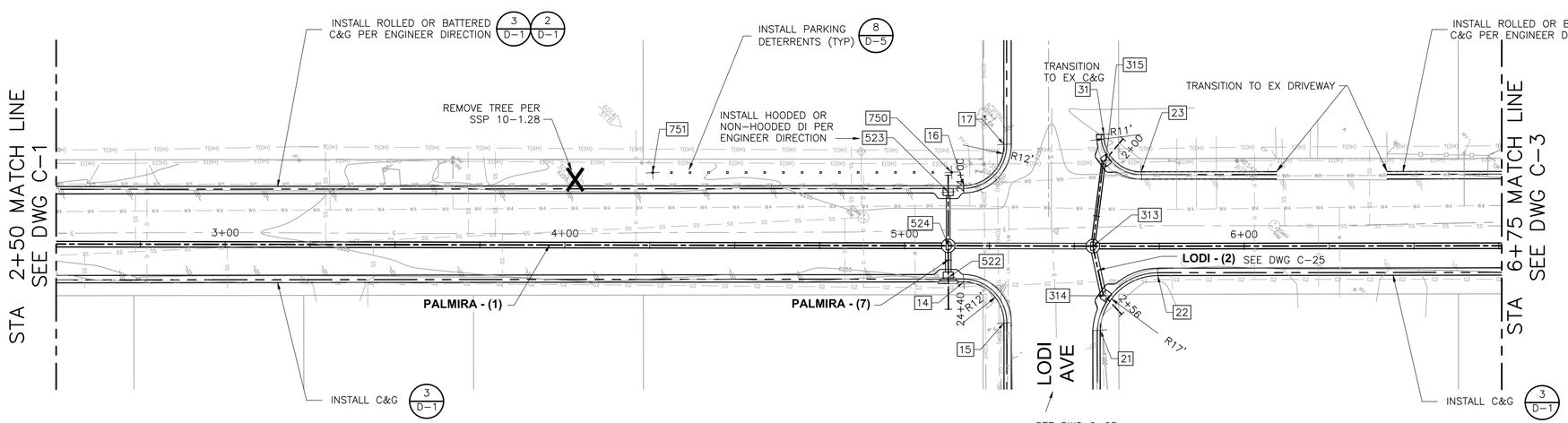

PLAN

NOTES:

1. INSTALL CURB DRIVEWAY TRANSITIONS AT ALL DRIVEWAY CROSSINGS UNLESS OTHERWISE INDICATED ON THE PLANS.
2. INSTALL CURB END TRANSITIONS AT TERMINATIONS OF ALL NEW CURB AND GUTTER SECTIONS.
3. INSTALL CURB CORNER TRANSITIONS IN ALL LOCATIONS WHERE NEW CURB AND GUTTER CONTINUES AROUND STREET CORNERS.
4. MATCH EXISTING TOP BACK OF CURB, MATCH FLOW LINE, AND INSTALL COLD JOINT TIE-INS WHEN TRANSITIONING TO EXISTING CURB AND GUTTER OR DRIVEWAYS.
5. # SEE SHEETS G-4 & G-5 FOR DATA POINT TABLES.

1" = 20'
10 0 20

100% BID SET

REV	DATE	DESCRIPTION	BY

WARNING
0 1/2" 1"
IF THIS BAR SCALE DOES NOT MEASURE 1" THIS DWG HAS BEEN REDUCED SCALE ACCORDINGLY

CITY OF SOUTH LAKE TAHOE
DEPARTMENT OF PUBLIC WORKS
1052 TATA LANE
SOUTH LAKE TAHOE, CA 96150
Ph: (530) 542-6030 Fax: (530) 541-7524

REGISTERED PROFESSIONAL ENGINEER No. C80207 Exp. 09/30/16 CIVIL STATE OF CALIFORNIA

CDM Smith
12313 Soaring Way, Suite 2-D
Truckee, California 96161
Tel (530) 582-7235
Fax (530) 582-1098

DESIGNED BY: RHV
DRAWN BY: OMN
SHEET CHK'D BY: RHV
CROSS CHK'D BY: SLS
DATE: MAY 8, 2015

SIERRA TRACT PH 3 & 4 EROSION CONTROL PROJECT
SHEET TITLE
PALMIRA AVE PLAN AND PROFILE

JOB NO. 27497-93981
SCALE: AS NOTED
SHEET 9 OF 57
DWG. NO:
C-02

© 2012 CDM SMITH ALL RIGHTS RESERVED.
REUSE OF DOCUMENTS: THESE DOCUMENTS AND DESIGNS PROVIDED BY PROFESSIONAL SERVICE, INCORPORATED HEREIN, ARE THE PROPERTY OF CDM SMITH AND ARE NOT TO BE USED, IN WHOLE OR PART, FOR ANY OTHER PROJECT WITHOUT THE WRITTEN AUTHORIZATION OF CDM SMITH.

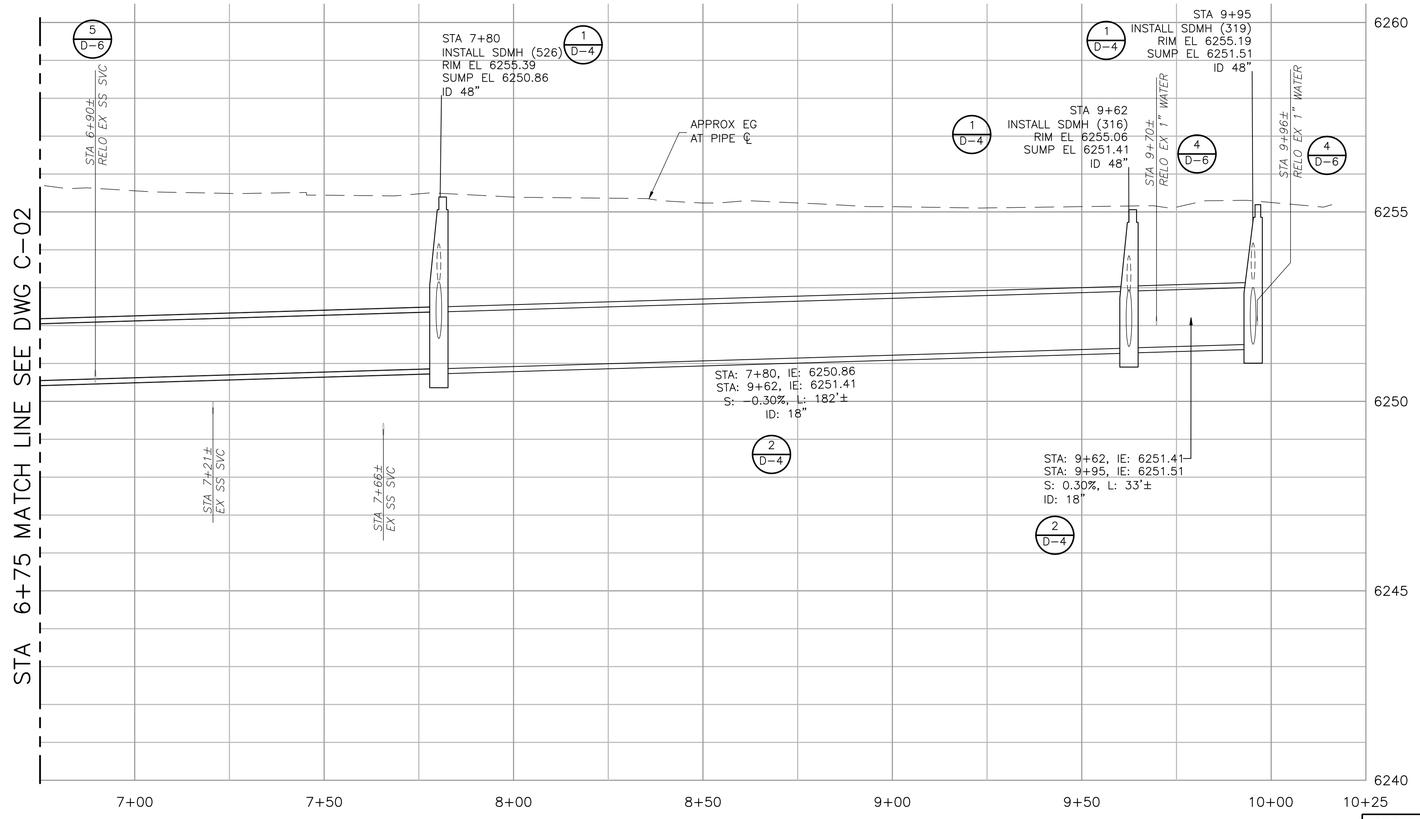

PALMIRA - (1)

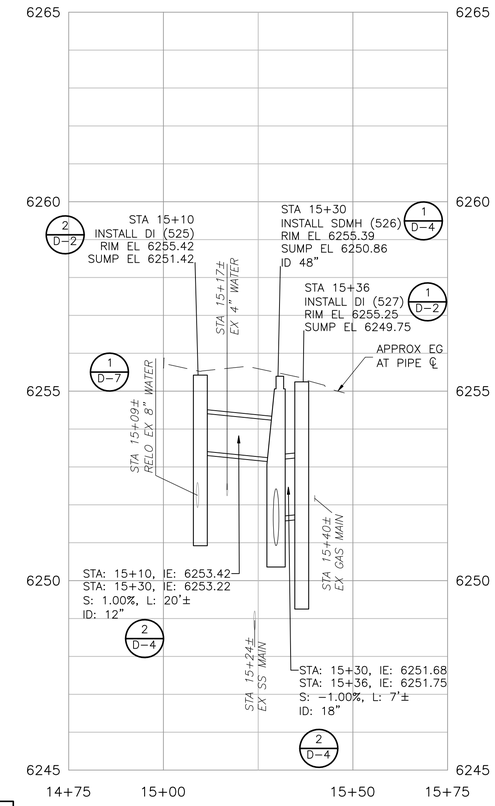

PALMIRA - (8)

PROFILE SCALES
HORIZ: 1"=20'
VERT: 1"=2'

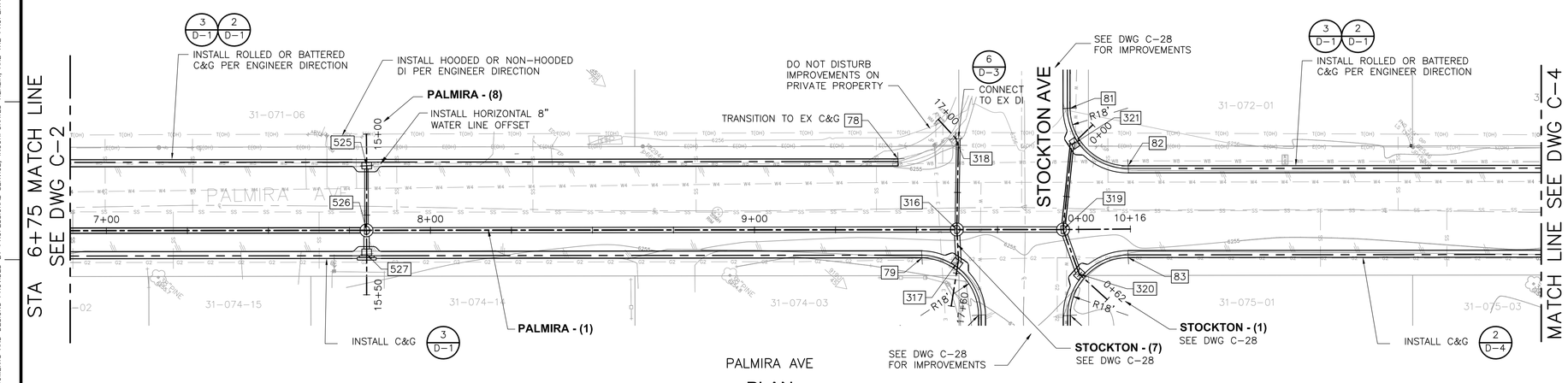

PALMIRA AVE

PLAN

NOTES:

1. INSTALL CURB DRIVEWAY TRANSITIONS AT ALL DRIVEWAY CROSSINGS UNLESS OTHERWISE INDICATED ON THE PLANS. (5/D-1)
2. INSTALL CURB END TRANSITIONS AT TERMINATIONS OF ALL NEW CURB AND GUTTER SECTIONS. (4/D-1)
3. INSTALL CURB CORNER TRANSITIONS IN ALL LOCATIONS WHERE NEW CURB AND GUTTER CONTINUES AROUND STREET CORNERS. (7/D-1)
4. MATCH EXISTING TOP BACK OF CURB, MATCH FLOW LINE AND INSTALL COLD JOINT TIE-INS WHEN TRANSITIONING TO EXISTING CURB AND GUTTER OR DRIVEWAYS.
5. # SEE SHEETS G-4 & G-5 FOR DATA POINT TABLES.

N

1" = 20'
10 0 20

100% BID SET

REV	DATE	DESCRIPTION	BY

WARNING
0 1/2" 1"
IF THIS BAR SCALE DOES NOT MEASURE 1" THIS DWG HAS BEEN REDUCED SCALE ACCORDINGLY

CITY OF SOUTH LAKE TAHOE
DEPARTMENT OF PUBLIC WORKS
1052 TATA LANE
SOUTH LAKE TAHOE, CA 96150
Ph: (530) 542-6030 Fax: (530) 541-7524

REGISTERED PROFESSIONAL ENGINEER No. C80207 Exp. 09/30/16 CIVIL STATE OF CALIFORNIA

CDM Smith
12313 Soaring Way, Suite 2-D
Truckee, California 96161
Tel (530) 582-7235
Fax (530) 582-1098

DESIGNED BY: RHV
DRAWN BY: OMN
SHEET CHK'D BY: RHV
CROSS CHK'D BY: SLS
DATE: MAY 8, 2015

SIERRA TRACT PH 3 & 4 EROSION CONTROL PROJECT
SHEET TITLE
PALMIRA AVE PLAN AND PROFILE

JOB NO. 27497-93981
SCALE: AS NOTED
SHEET 10 OF 57
DWG. NO: C-03

©2012 CDM SMITH ALL RIGHTS RESERVED.
REUSE OF DOCUMENTS: THESE DOCUMENTS AND DESIGNS PROVIDED BY PROFESSIONAL SERVICE, INCORPORATED HEREIN, ARE THE PROPERTY OF CDM SMITH AND ARE NOT TO BE USED, IN WHOLE OR PART, FOR ANY OTHER PROJECT WITHOUT THE WRITTEN AUTHORIZATION OF CDM SMITH.

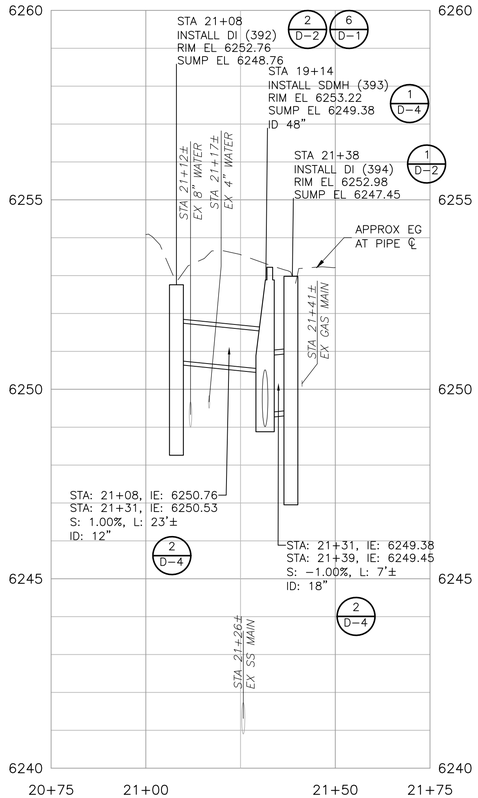

PALMIRA - (5)

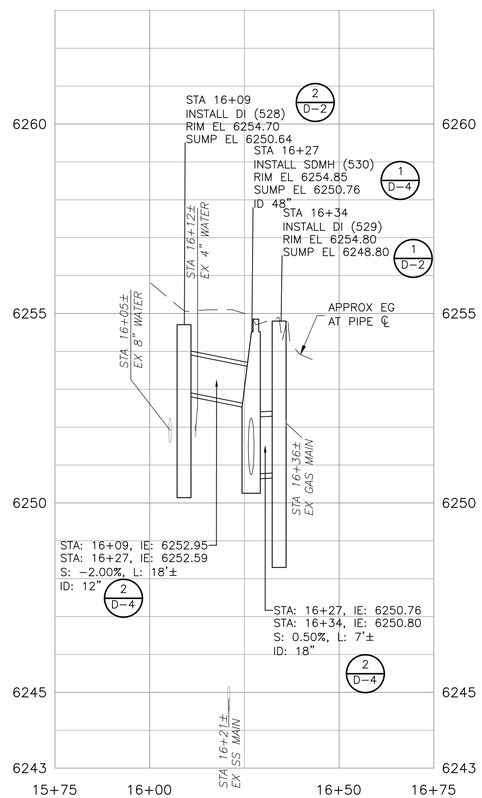

PALMIRA - (9)

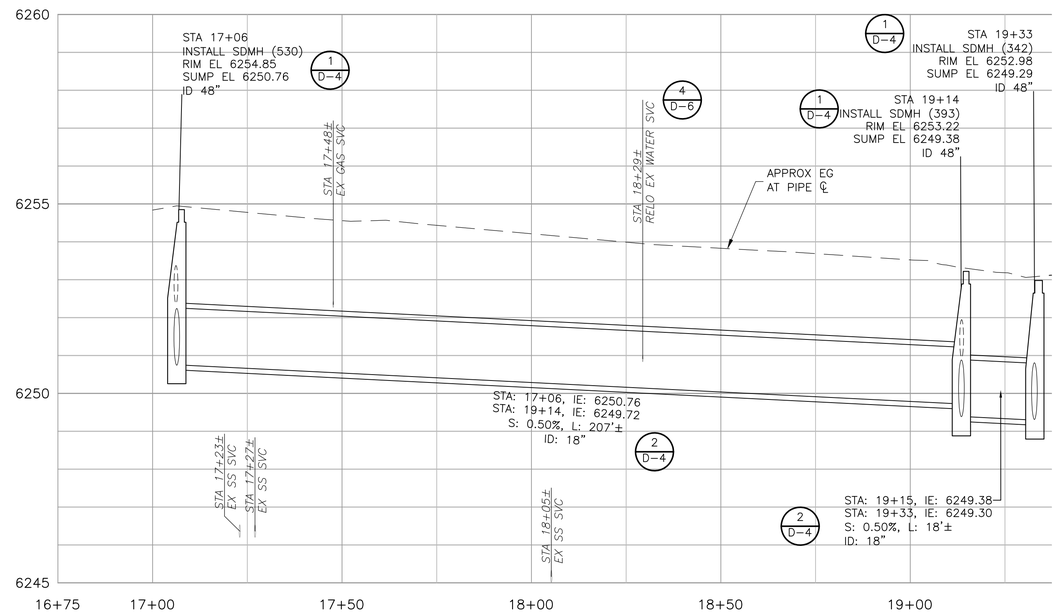

PALMIRA - (10)

PROFILE SCALES
HORIZ: 1"=20'
VERT: 1"=2'

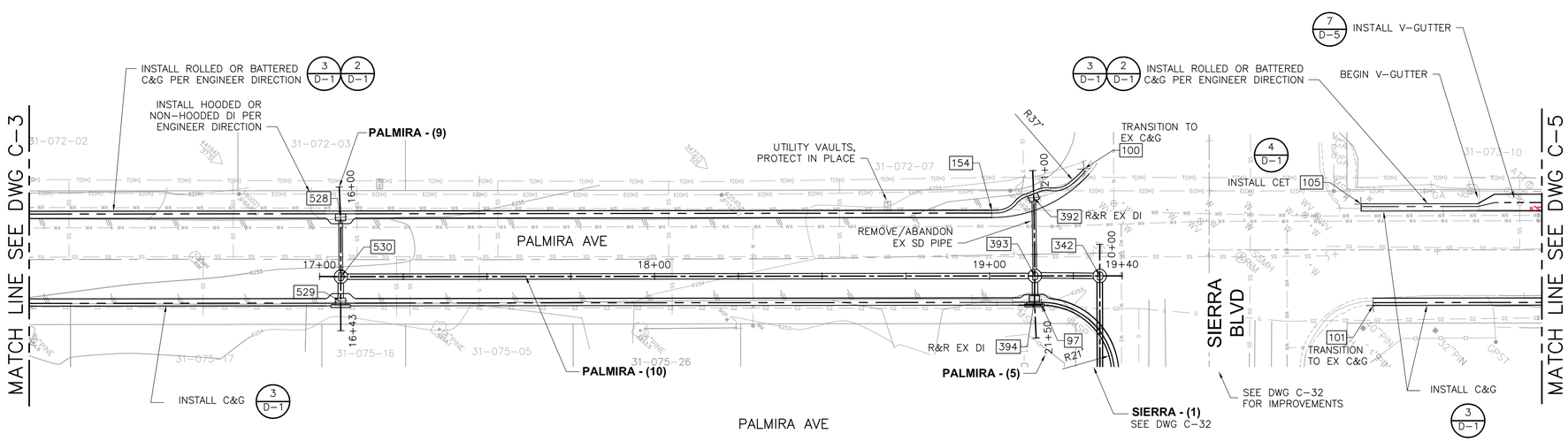

PALMIRA AVE

PLAN

NOTES:

1. INSTALL CURB DRIVEWAY TRANSITIONS AT ALL DRIVEWAY CROSSINGS UNLESS OTHERWISE INDICATED ON THE PLANS. (5/D-1)
2. INSTALL CURB END TRANSITIONS AT TERMINATIONS OF ALL NEW CURB AND GUTTER SECTIONS. (4/D-1)
3. INSTALL CURB CORNER TRANSITIONS IN ALL LOCATIONS WHERE NEW CURB AND GUTTER CONTINUES AROUND STREET CORNERS. (7/D-1)
4. MATCH EXISTING TOP BACK OF CURB, MATCH FLOW LINE AND INSTALL COLD JOINT TIE-INS WHEN TRANSITIONING TO EXISTING CURB AND GUTTER OR DRIVEWAYS.
5. # SEE SHEETS G-4 & G-5 FOR DATA POINT TABLES.

1" = 20'
10 0 20

100% BID SET

REV	DATE	DESCRIPTION	BY

WARNING
0 1/2" 1"
IF THIS BAR SCALE DOES NOT MEASURE 1" THIS DWG HAS BEEN REDUCED SCALE ACCORDINGLY

CITY OF SOUTH LAKE TAHOE
DEPARTMENT OF PUBLIC WORKS
1052 TATA LANE
SOUTH LAKE TAHOE, CA 96150
Ph: (530) 542-6030 Fax: (530) 541-7524

REGISTERED PROFESSIONAL ENGINEER
RAFAEL VIDAL
No. C80207
Exp. 09/30/16
CIVIL
STATE OF CALIFORNIA

CDM Smith
12313 Soaring Way, Suite 2-D
Truckee, California 96161
Tel (530) 582-7235
Fax (530) 582-1098

DESIGNED BY: RHV
DRAWN BY: OMN
SHEET CHK'D BY: RHV
CROSS CHK'D BY: SLS
DATE: MAY 8, 2015

SIERRA TRACT PH 3 & 4 EROSION CONTROL PROJECT
SHEET TITLE
PALMIRA AVE PLAN AND PROFILE

JOB NO. 27497-93981
SCALE: AS NOTED
SHEET 11 OF 57
DWG. NO:
C-04

© 2012 CDM SMITH ALL RIGHTS RESERVED.
REUSE OF DOCUMENTS: THESE DOCUMENTS AND DESIGNS PROVIDED BY PROFESSIONAL SERVICE, INCORPORATED HEREIN, ARE THE PROPERTY OF CDM SMITH AND ARE NOT TO BE USED, IN WHOLE OR PART, FOR ANY OTHER PROJECT WITHOUT THE WRITTEN AUTHORIZATION OF CDM SMITH.

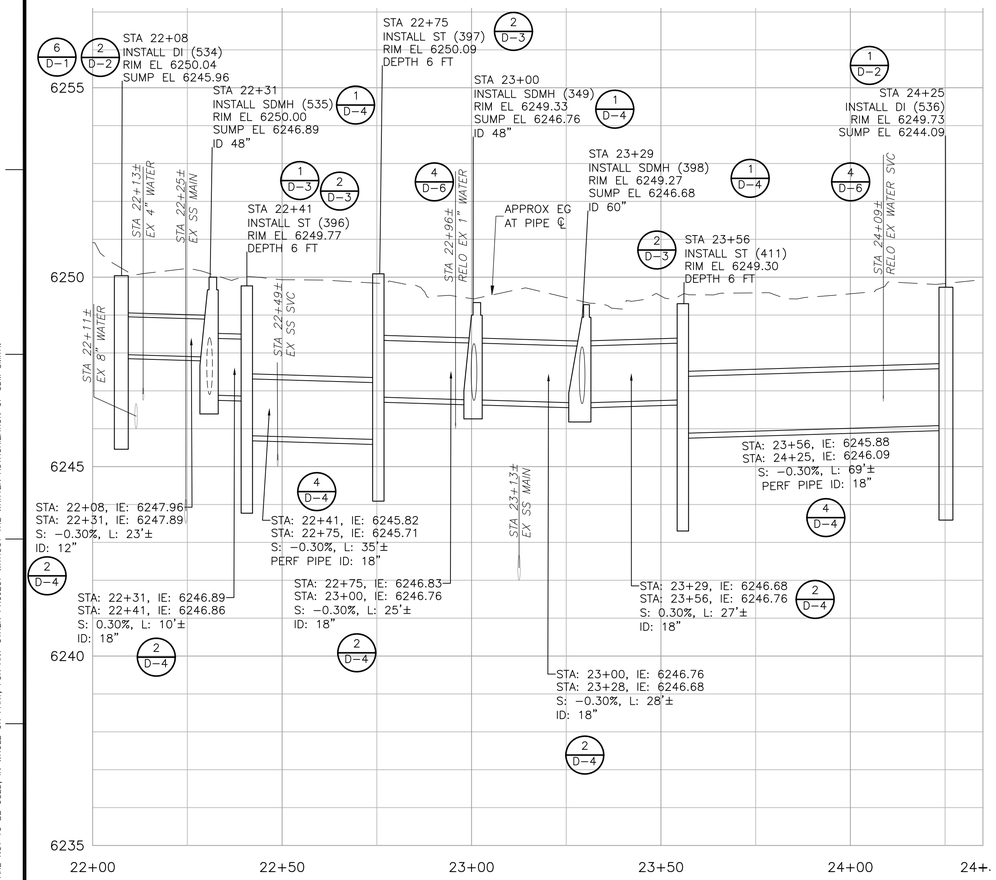

PALMIRA - (6)

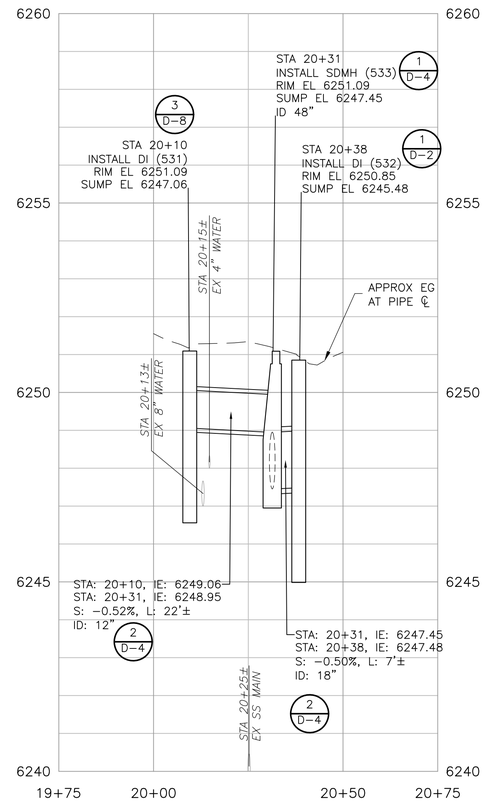

PALMIRA - (11)

PROFILE SCALES
HORIZ: 1"=20'
VERT: 1"=2'

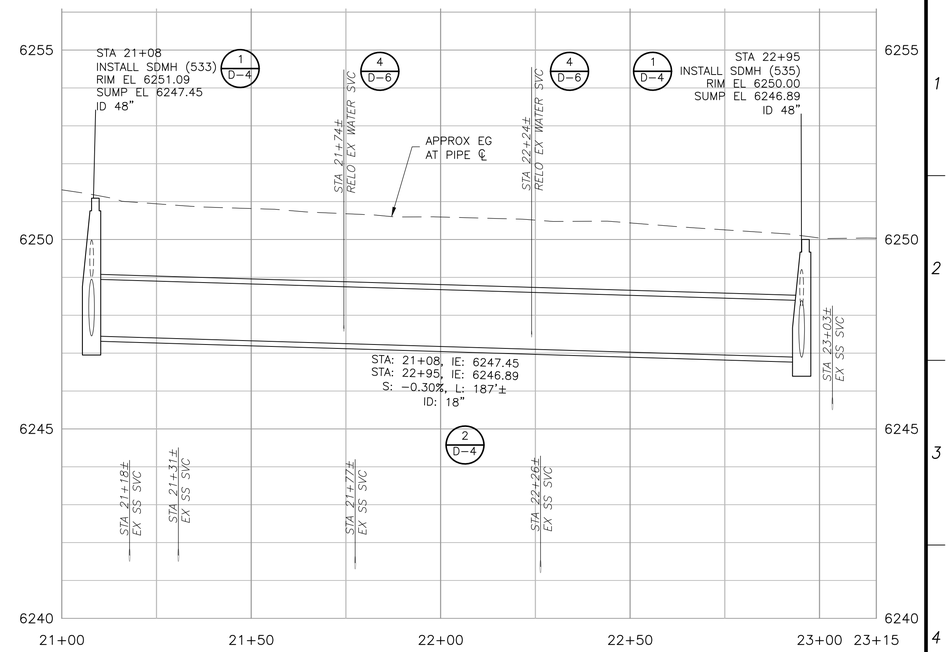

PALMIRA - (12)

NOTES:

1. INSTALL CURB DRIVEWAY TRANSITIONS AT ALL DRIVEWAY CROSSINGS UNLESS OTHERWISE INDICATED ON THE PLANS. (5/D-1)
2. INSTALL CURB END TRANSITIONS AT TERMINATIONS OF ALL NEW CURB AND GUTTER SECTIONS. (4/D-1)
3. INSTALL CURB CORNER TRANSITIONS IN ALL LOCATIONS WHERE NEW CURB AND GUTTER CONTINUES AROUND STREET CORNERS. (7/D-1)
4. MATCH EXISTING TOP BACK OF CURB, MATCH FLOW LINE AND INSTALL COLD JOINT TIE-INS WHEN TRANSITIONING TO EXISTING CURB AND GUTTER OR DRIVEWAYS.
5. # SEE SHEETS G-4 & G-5 FOR DATA POINT TABLES.

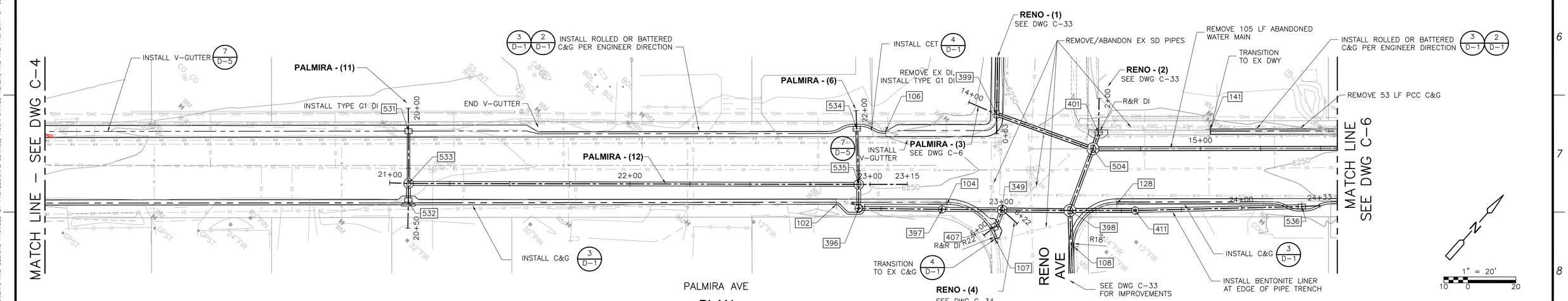

PLAN

100% BID SET

REV	DATE	DESCRIPTION	BY

WARNING
0 1/2" 1"
IF THIS BAR SCALE DOES NOT MEASURE 1" THIS DWG HAS BEEN REDUCED SCALE ACCORDINGLY

CITY OF SOUTH LAKE TAHOE
DEPARTMENT OF PUBLIC WORKS
1052 TATA LANE
SOUTH LAKE TAHOE, CA 96150
Ph: (530) 542-6030 Fax: (530) 541-7524

REGISTERED PROFESSIONAL ENGINEER
RICHARD H. VADEN JR.
No. C80207
Exp. 09/30/16
CIVIL
STATE OF CALIFORNIA

CDM Smith
12313 Soaring Way, Suite 2-D
Truckee, California 96161
Tel (530) 582-7235
Fax (530) 582-1098

DESIGNED BY: RHV
DRAWN BY: OMN
SHEET CHK'D BY: RHV
CROSS CHK'D BY: SLS
DATE: MAY 8, 2015

SIERRA TRACT PH 3 & 4 EROSION CONTROL PROJECT
SHEET TITLE
PALMIRA AVE PLAN AND PROFILE

JOB NO. 27497-93981
SCALE: AS NOTED
SHEET 12 OF 57
DWG. NO: C-05

© 2012 CDM SMITH ALL RIGHTS RESERVED.
REUSE OF DOCUMENTS: THESE DOCUMENTS AND DESIGNS PROVIDED BY PROFESSIONAL SERVICE, INCORPORATED HEREIN, ARE THE PROPERTY OF CDM SMITH AND ARE NOT TO BE USED, IN WHOLE OR PART, FOR ANY OTHER PROJECT WITHOUT THE WRITTEN AUTHORIZATION OF CDM SMITH.

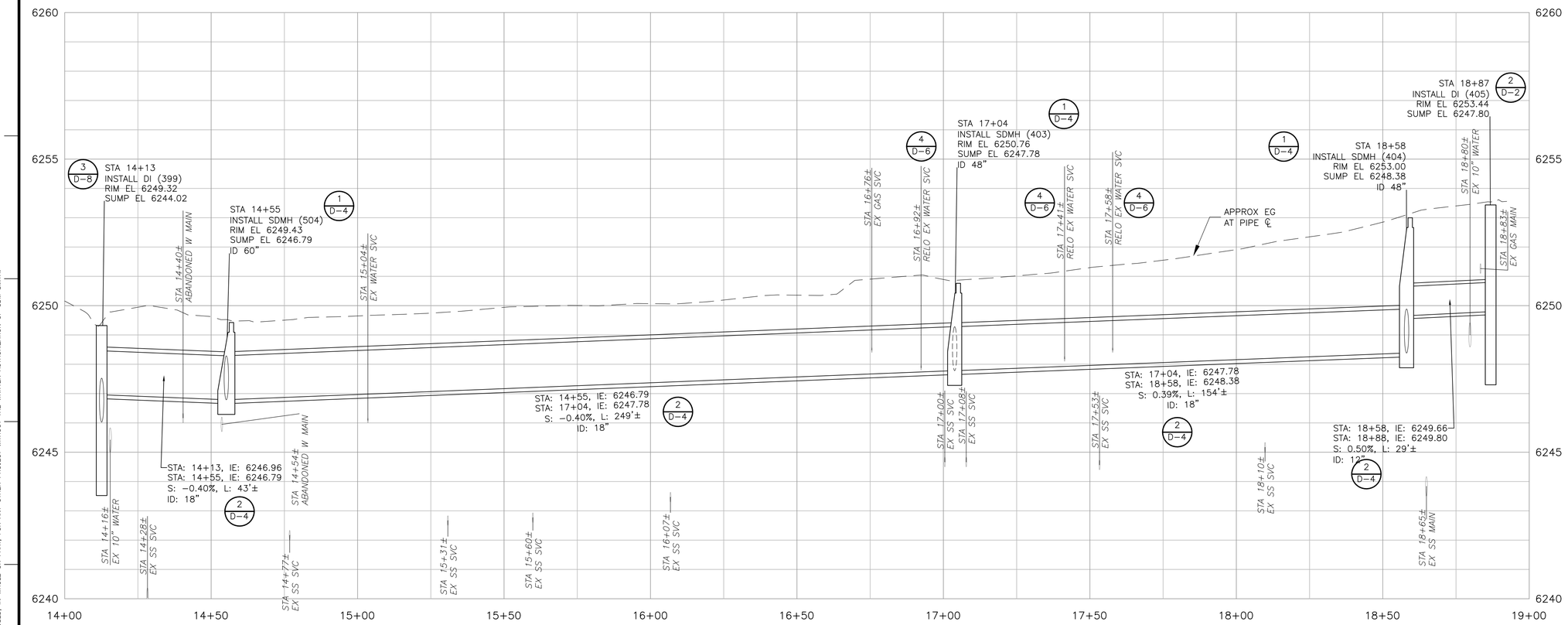

PALMIRA - (3)

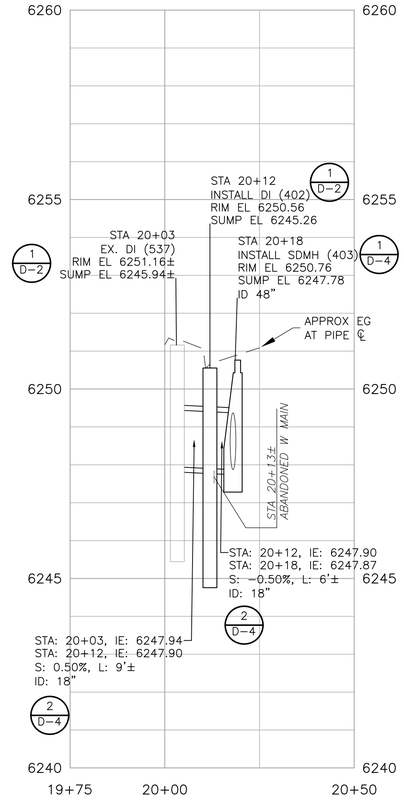

PALMIRA - (4)

PROFILE SCALES
HORIZ: 1"=20'
VERT: 1"=2'

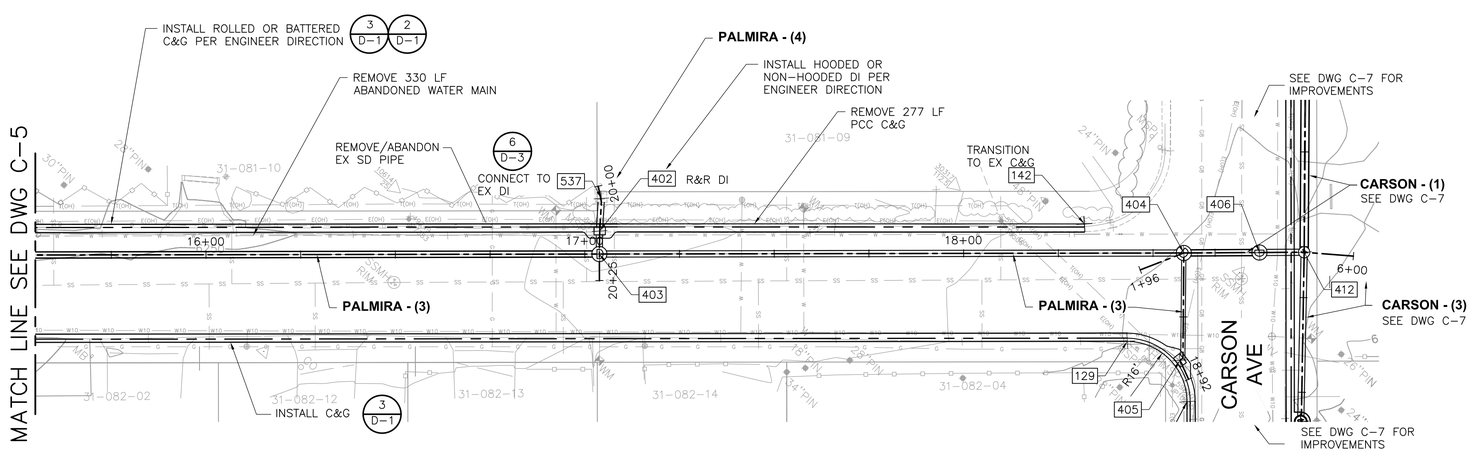

PALMIRA AVE

PLAN

NOTES:

1. INSTALL CURB DRIVEWAY TRANSITIONS AT ALL DRIVEWAY CROSSINGS UNLESS OTHERWISE INDICATED ON THE PLANS. (5/D-1)
2. INSTALL CURB END TRANSITIONS AT TERMINATIONS OF ALL NEW CURB AND GUTTER SECTIONS. (4/D-1)
3. INSTALL CURB CORNER TRANSITIONS IN ALL LOCATIONS WHERE NEW CURB AND GUTTER CONTINUES AROUND STREET CORNERS. (7/D-1)
4. MATCH EXISTING TOP BACK OF CURB, MATCH FLOW LINE AND INSTALL COLD JOINT TIE-INS WHEN TRANSITIONING TO EXISTING CURB AND GUTTER OR DRIVEWAYS.
5. # SEE SHEETS G-4 & G-5 FOR DATA POINT TABLES.

1" = 20'
10 0 20

100% BID SET

REV	DATE	DESCRIPTION	BY

WARNING
0 1/2" 1"
IF THIS BAR SCALE DOES NOT MEASURE 1" THIS DWG HAS BEEN REDUCED SCALE ACCORDINGLY

CITY OF SOUTH LAKE TAHOE
DEPARTMENT OF PUBLIC WORKS
1052 TATA LANE
SOUTH LAKE TAHOE, CA 96150
Ph: (530) 542-6030 Fax: (530) 541-7524

REGISTERED PROFESSIONAL ENGINEER
No. C80207
Exp. 09/30/16
CIVIL
STATE OF CALIFORNIA

CDM Smith
12313 Soaring Way, Suite 2-D
Truckee, California 96161
Tel (530) 582-7235
Fax (530) 582-1098

DESIGNED BY: RHV
DRAWN BY: OMN
SHEET CHK'D BY: RHV
CROSS CHK'D BY: SLS
DATE: MAY 8, 2015

SIERRA TRACT PH 3 & 4 EROSION CONTROL PROJECT
SHEET TITLE
PALMIRA AVE PLAN AND PROFILE

JOB NO. 27497-93981
SCALE: AS NOTED
SHEET 13 OF 57
DWG. NO:
C-06

© 2012 CDM SMITH ALL RIGHTS RESERVED.
REUSE OF DOCUMENTS: THESE DOCUMENTS AND DESIGNS PROVIDED BY PROFESSIONAL SERVICE, INCORPORATED HEREIN, ARE THE PROPERTY OF CDM SMITH AND ARE NOT TO BE USED, IN WHOLE OR PART, FOR ANY OTHER PROJECT WITHOUT THE WRITTEN AUTHORIZATION OF CDM SMITH.

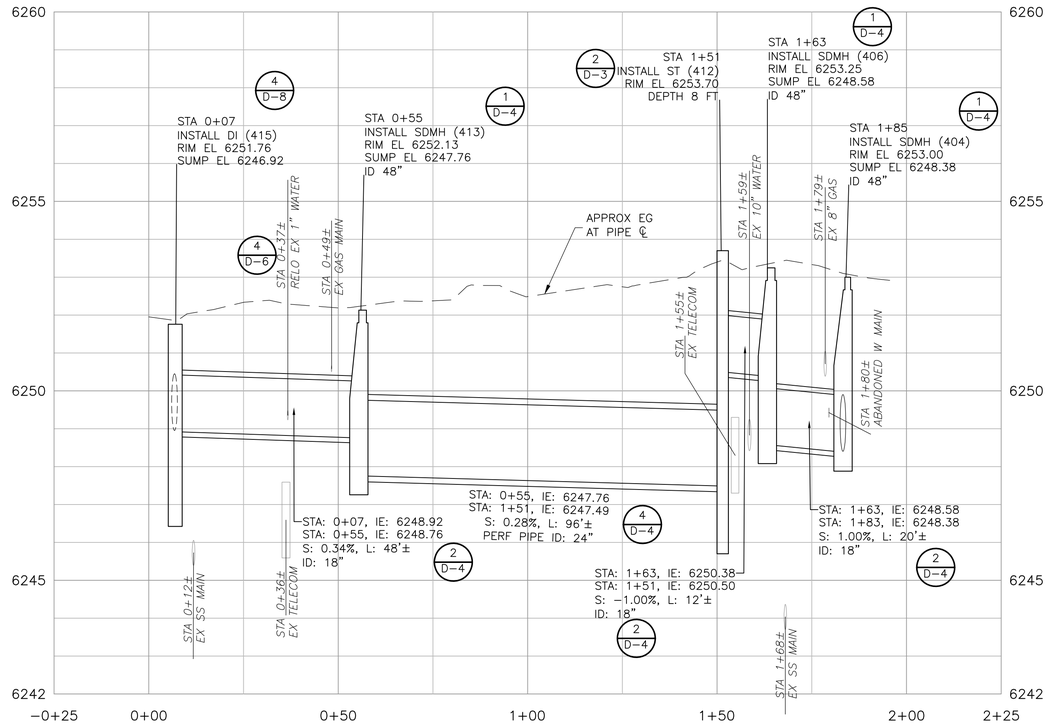

CARSON - (1)

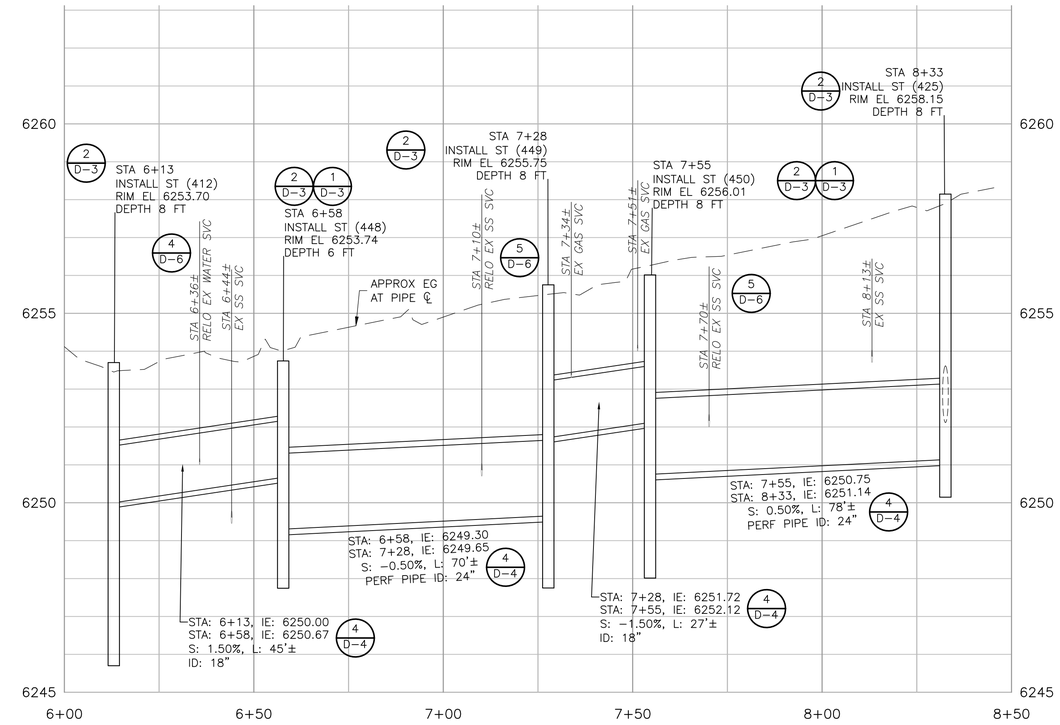

CARSON - (3)

PROFILE SCALES
HORIZ: 1"=20'
VERT: 1"=2'

NOTES:

1. INSTALL CURB DRIVEWAY TRANSITIONS AT ALL DRIVEWAY CROSSINGS UNLESS OTHERWISE INDICATED ON THE PLANS. (5/D-1)
2. INSTALL CURB END TRANSITIONS AT TERMINATIONS OF ALL NEW CURB AND GUTTER SECTIONS. (4/D-1)
3. INSTALL CURB CORNER TRANSITIONS IN ALL LOCATIONS WHERE NEW CURB AND GUTTER CONTINUES AROUND STREET CORNERS. (7/D-1)
4. MATCH EXISTING TOP BACK OF CURB, MATCH FLOW LINE AND INSTALL COLD JOINT TIE-INS WHEN TRANSITIONING TO EXISTING CURB AND GUTTER OR DRIVEWAYS.
5. # SEE SHEETS G-4 & G-5 FOR DATA POINT TABLES.

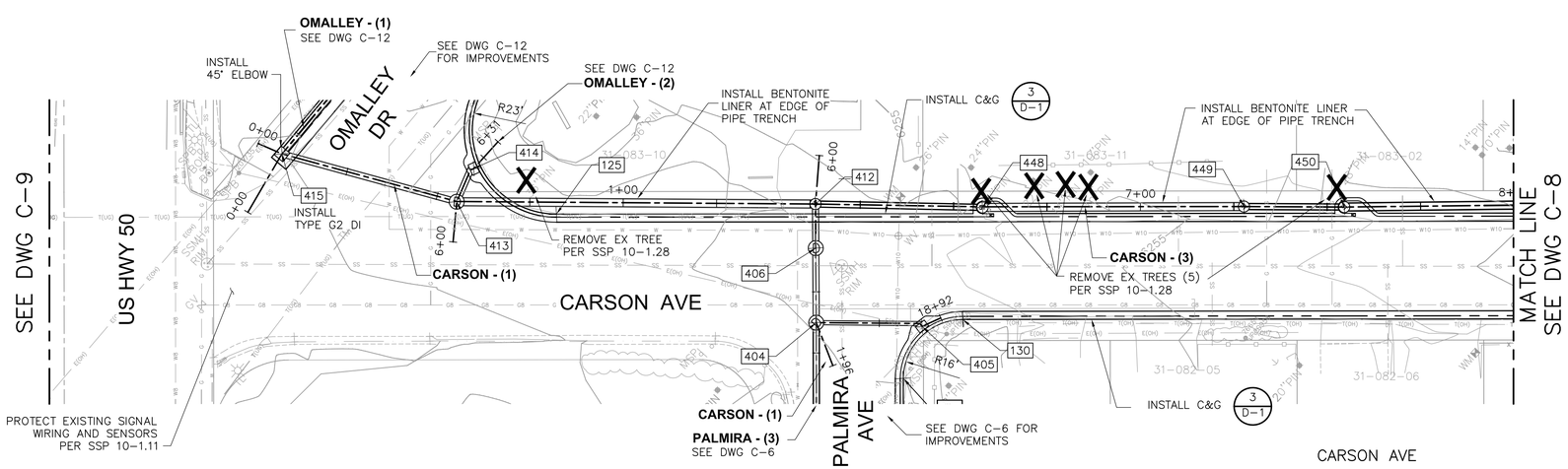

CARSON AVE

PLAN

1" = 20'

100% BID SET

REV	DATE	DESCRIPTION	BY

WARNING
0 1/2" 1"
IF THIS BAR SCALE DOES NOT MEASURE 1" THIS DWG HAS BEEN REDUCED SCALE ACCORDINGLY

CITY OF SOUTH LAKE TAHOE
DEPARTMENT OF PUBLIC WORKS
1052 TATA LANE
SOUTH LAKE TAHOE, CA 96150
Ph: (530) 542-6030 Fax: (530) 541-7524

REGISTERED PROFESSIONAL ENGINEER No. C80207 Exp. 09/30/16 CIVIL STATE OF CALIFORNIA

CDM Smith
12313 Soaring Way, Suite 2-D
Truckee, California 96161
Tel (530) 582-7235
Fax (530) 582-1098

DESIGNED BY: RHV
DRAWN BY: OMN
SHEET CHK'D BY: RHV
CROSS CHK'D BY: SLS
DATE: MAY 8, 2015

SIERRA TRACT PH 3 & 4 EROSION CONTROL PROJECT
SHEET TITLE
CARSON AVE PLAN AND PROFILE

JOB NO. 27497-93981
SCALE: AS NOTED
SHEET 14 OF 57
DWG. NO:
C-07

© 2012 CDM SMITH ALL RIGHTS RESERVED.
REUSE OF DOCUMENTS: THESE DOCUMENTS AND DESIGNS PROVIDED BY PROFESSIONAL SERVICE, INCORPORATED HEREIN, ARE THE PROPERTY OF CDM SMITH AND ARE NOT TO BE USED, IN WHOLE OR PART, FOR ANY OTHER PROJECT WITHOUT THE WRITTEN AUTHORIZATION OF CDM SMITH.

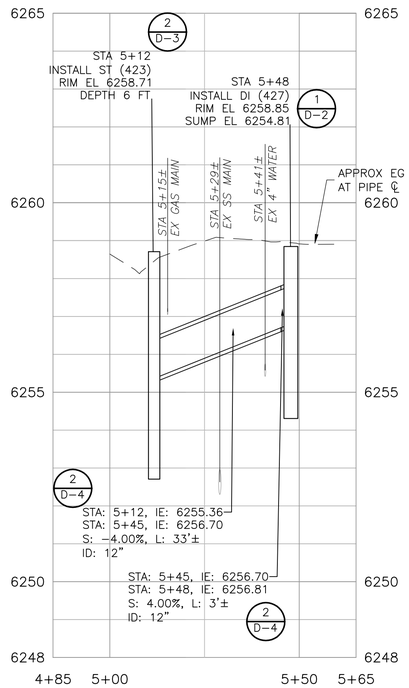

CARSON - (2)

PROFILE SCALES
HORIZ: 1"=20'
VERT: 1"=2'

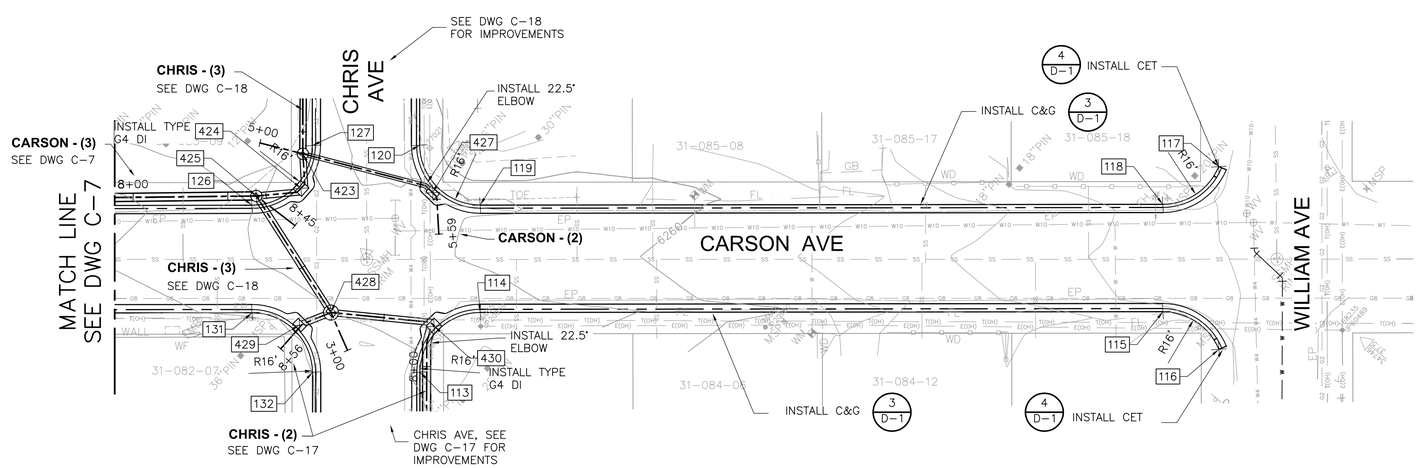

CARSON AVE

PLAN

NOTES:

1. INSTALL CURB DRIVEWAY TRANSITIONS AT ALL DRIVEWAY CROSSINGS UNLESS OTHERWISE INDICATED ON THE PLANS. (5/D-1)
2. INSTALL CURB END TRANSITIONS AT TERMINATIONS OF ALL NEW CURB AND GUTTER SECTIONS. (4/D-1)
3. INSTALL CURB CORNER TRANSITIONS IN ALL LOCATIONS WHERE NEW CURB AND GUTTER CONTINUES AROUND STREET CORNERS. (7/D-1)
4. MATCH EXISTING TOP BACK OF CURB, MATCH FLOW LINE AND INSTALL COLD JOINT TIE-INS WHEN TRANSITIONING TO EXISTING CURB AND GUTTER OR DRIVEWAYS.
5. # SEE SHEETS G-4 & G-5 FOR DATA POINT TABLES.

1" = 20'
10 0 20

100% BID SET

REV	DATE	DESCRIPTION	BY

WARNING
0 1/2" 1"
IF THIS BAR SCALE DOES NOT MEASURE 1" THIS DWG HAS BEEN REDUCED SCALE ACCORDINGLY

CITY OF SOUTH LAKE TAHOE
DEPARTMENT OF PUBLIC WORKS
1052 TATA LANE
SOUTH LAKE TAHOE, CA 96150
Ph: (530) 542-6030 Fax: (530) 541-7524

REGISTERED PROFESSIONAL ENGINEER No. C80207 Exp. 09/30/16 CIVIL STATE OF CALIFORNIA

CDM Smith
12313 Soaring Way, Suite 2-D
Truckee, California 96161
Tel (530) 582-7235
Fax (530) 582-1098

DESIGNED BY: RHV
DRAWN BY: OMN
SHEET CHK'D BY: RHV
CROSS CHK'D BY: SLS
DATE: FEBRUARY 20, 2015

SIERRA TRACT PH 3 & 4 EROSION CONTROL PROJECT

SHEET TITLE
CARSON AVE PLAN AND PROFILE

JOB NO. 27497-93981
SCALE: AS NOTED
SHEET 15 OF 57
DWG. NO:
C-08

© 2012 CDM SMITH ALL RIGHTS RESERVED.
REUSE OF DOCUMENTS: THESE DOCUMENTS AND DESIGNS PROVIDED BY PROFESSIONAL SERVICE, INCORPORATED HEREIN, ARE THE PROPERTY OF CDM SMITH AND ARE NOT TO BE USED, IN WHOLE OR PART, FOR ANY OTHER PROJECT WITHOUT THE WRITTEN AUTHORIZATION OF CDM SMITH.

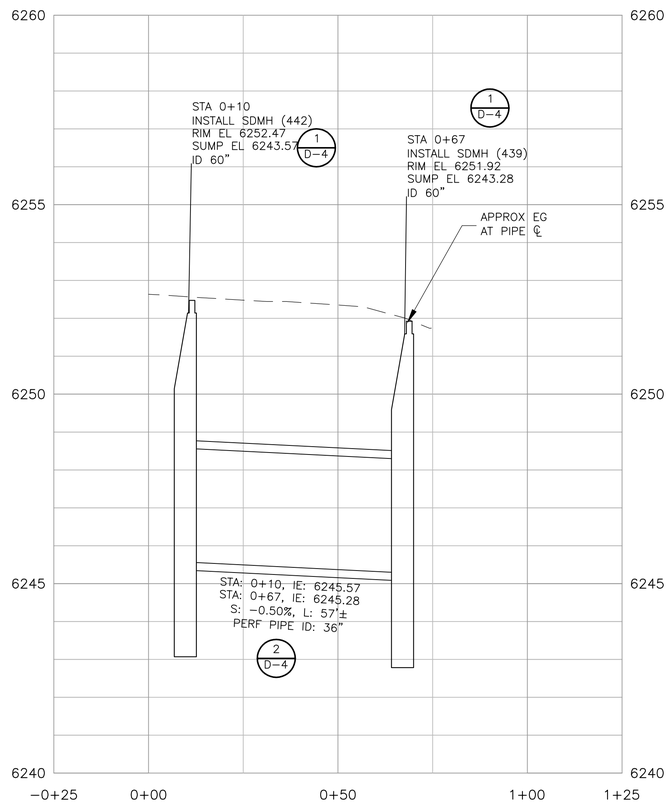

RUBICON - (1)

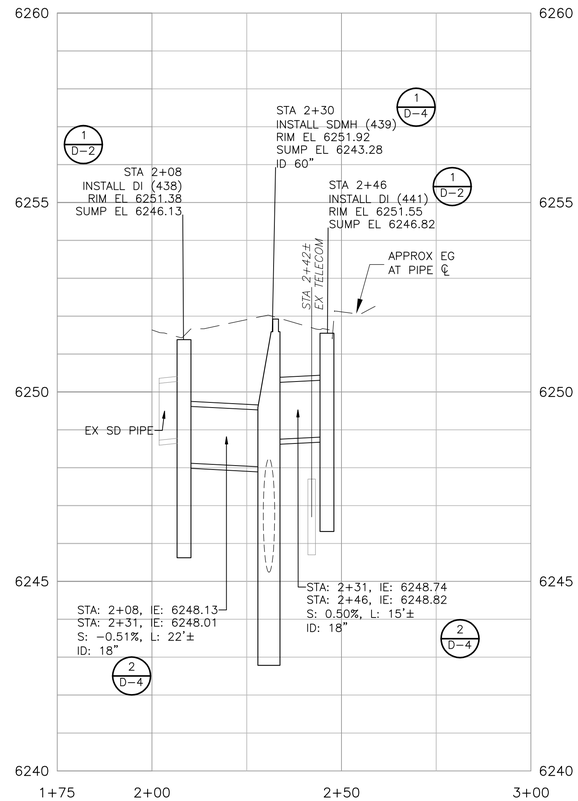

RUBICON - (2)

PROFILE SCALES
HORIZ: 1"=20'
VERT: 1"=2'

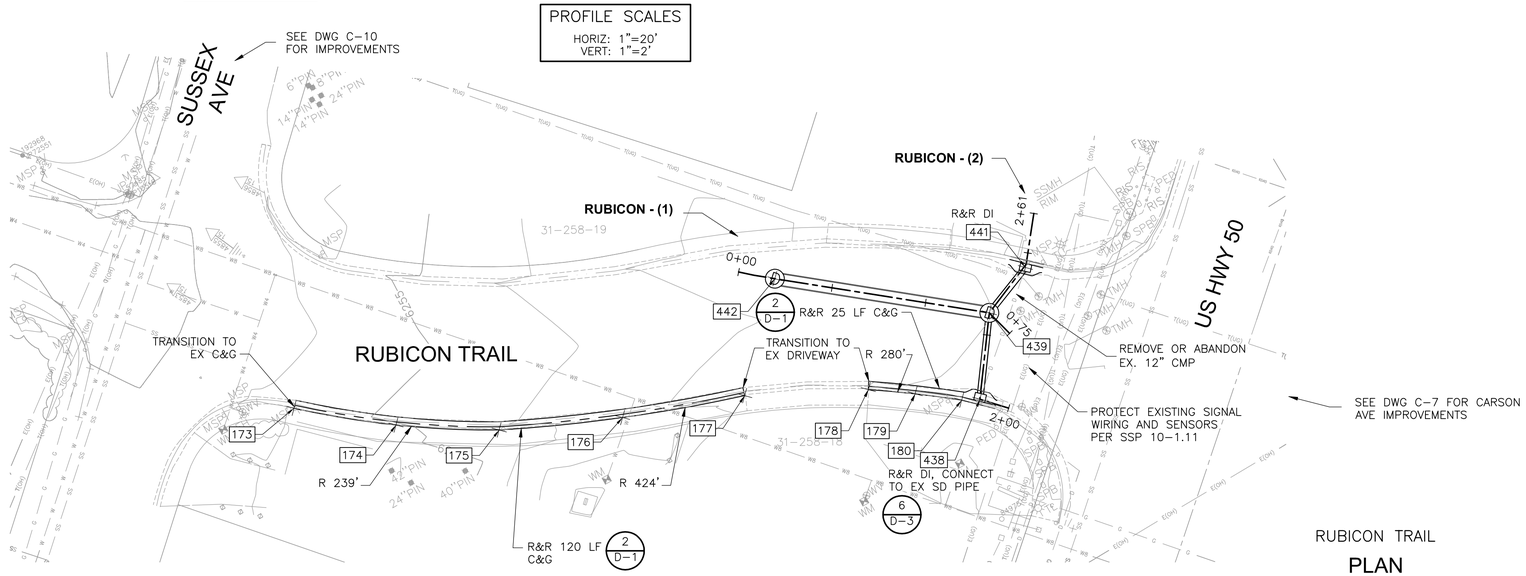

RUBICON TRAIL

PLAN

1" = 20'
10 0 20

NOTES:

1. INSTALL CURB DRIVEWAY TRANSITIONS AT ALL DRIVEWAY CROSSINGS UNLESS OTHERWISE INDICATED ON THE PLANS. (5 D-1)
2. INSTALL CURB END TRANSITIONS AT TERMINATIONS OF ALL NEW CURB AND GUTTER SECTIONS. (4 D-1)
3. INSTALL CURB CORNER TRANSITIONS IN ALL LOCATIONS WHERE NEW CURB AND GUTTER CONTINUES AROUND STREET CORNERS. (7 D-1)
4. MATCH EXISTING TOP BACK OF CURB, MATCH FLOW LINE AND INSTALL COLD JOINT TIE-INS WHEN TRANSITIONING TO EXISTING CURB AND GUTTER OR DRIVEWAYS.
5. # SEE SHEETS G-4 & G-5 FOR DATA POINT TABLES.

100% BID SET

REV	DATE	DESCRIPTION	BY

WARNING
0 1/2" 1"
IF THIS BAR SCALE DOES NOT MEASURE 1" THIS DWG HAS BEEN REDUCED SCALE ACCORDINGLY

CITY OF SOUTH LAKE TAHOE
DEPARTMENT OF PUBLIC WORKS
1052 TATA LANE
SOUTH LAKE TAHOE, CA 96150
Ph: (530) 542-6030 Fax: (530) 541-7524

REGISTERED PROFESSIONAL ENGINEER No. C80207 Exp. 09/30/16 CIVIL STATE OF CALIFORNIA

CDM Smith
12313 Soaring Way, Suite 2-D
Truckee, California 96161
Tel (530) 582-7235
Fax (530) 582-1098

DESIGNED BY: RHV
DRAWN BY: OMN
SHEET CHK'D BY: RHV
CROSS CHK'D BY: SLS
DATE: FEBRUARY 20, 2015

SIERRA TRACT PH 3 & 4 EROSION CONTROL PROJECT
SHEET TITLE
RUBICON TRAIL PLAN AND PROFILE

JOB NO. 27497-93981
SCALE: AS NOTED
SHEET 16 OF 57
DWG. NO:
C-09

© 2012 CDM SMITH ALL RIGHTS RESERVED.
REUSE OF DOCUMENTS: THESE DOCUMENTS AND DESIGNS PROVIDED BY PROFESSIONAL SERVICE, INCORPORATED HEREIN, ARE THE PROPERTY OF CDM SMITH AND ARE NOT TO BE USED, IN WHOLE OR PART, FOR ANY OTHER PROJECT WITHOUT THE WRITTEN AUTHORIZATION OF CDM SMITH.

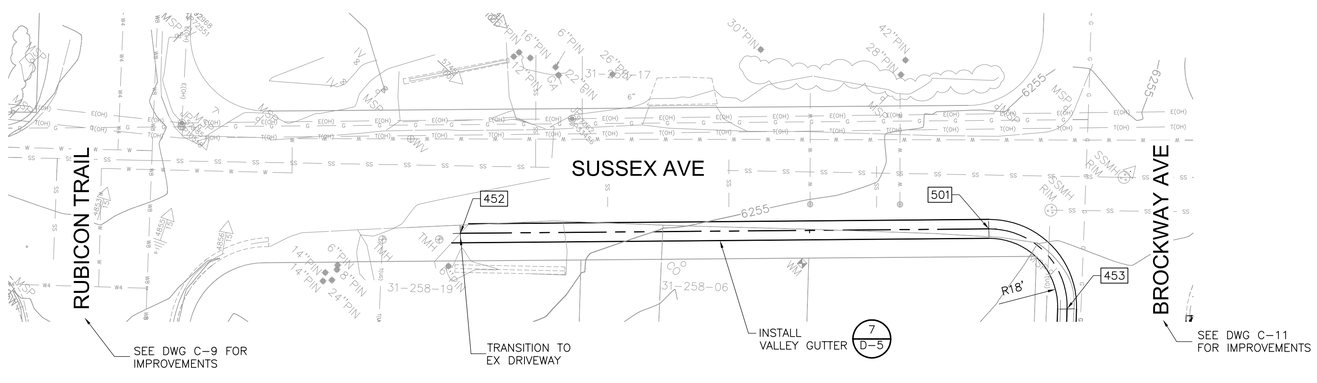

SUSSEX AVE

PLAN

NOTES:

1. INSTALL CURB DRIVEWAY TRANSITIONS AT ALL DRIVEWAY CROSSINGS UNLESS OTHERWISE INDICATED ON THE PLANS. (5 / D-1)
2. INSTALL CURB END TRANSITIONS AT TERMINATIONS OF ALL NEW CURB AND GUTTER SECTIONS. (4 / D-1)
3. INSTALL CURB CORNER TRANSITIONS IN ALL LOCATIONS WHERE NEW CURB AND GUTTER CONTINUES AROUND STREET CORNERS. (7 / D-1)
4. MATCH EXISTING TOP BACK OF CURB, MATCH FLOW LINE AND INSTALL COLD JOINT TIE-INS WHEN TRANSITIONING TO EXISTING CURB AND GUTTER OR DRIVEWAYS.
5. # SEE SHEETS G-4 & G-5 FOR DATA POINT TABLES.

N

1" = 20'

10 0 20

100% BID SET

REV	DATE	DESCRIPTION	BY

WARNING
0 1/2" 1"
IF THIS BAR SCALE DOES NOT MEASURE 1" THIS DWG HAS BEEN REDUCED SCALE ACCORDINGLY

CITY OF SOUTH LAKE TAHOE
DEPARTMENT OF PUBLIC WORKS
1052 TATA LANE
SOUTH LAKE TAHOE, CA 96150
Ph: (530) 542-6030 Fax: (541-7524

REGISTERED PROFESSIONAL ENGINEER
RICHARD H. VADEN JR.
No. C80207 Exp. 09/30/16
CIVIL
STATE OF CALIFORNIA

CDM Smith
12313 Soaring Way, Suite 2-D
Truckee, California 96161
Tel (530) 582-7235
Fax (530) 582-1098

DESIGNED BY: RHV
DRAWN BY: OMN
SHEET CHK'D BY: RHV
CROSS CHK'D BY: SLS
DATE: FEBRUARY 20, 2015

SIERRA TRACT PH 3 & 4 EROSION CONTROL PROJECT

SHEET TITLE
SUSSEX AVE PLAN AND PROFILE

JOB NO. 27497-93981
SCALE: AS NOTED
SHEET 17 OF 57
DWG. NO: C-10

©2012 CDM SMITH ALL RIGHTS RESERVED.
REUSE OF DOCUMENTS: THESE DOCUMENTS AND DESIGNS PROVIDED BY PROFESSIONAL SERVICE, INCORPORATED HEREIN, ARE THE PROPERTY OF CDM SMITH AND ARE NOT TO BE USED, IN WHOLE OR PART, FOR ANY OTHER PROJECT WITHOUT THE WRITTEN AUTHORIZATION OF CDM SMITH.

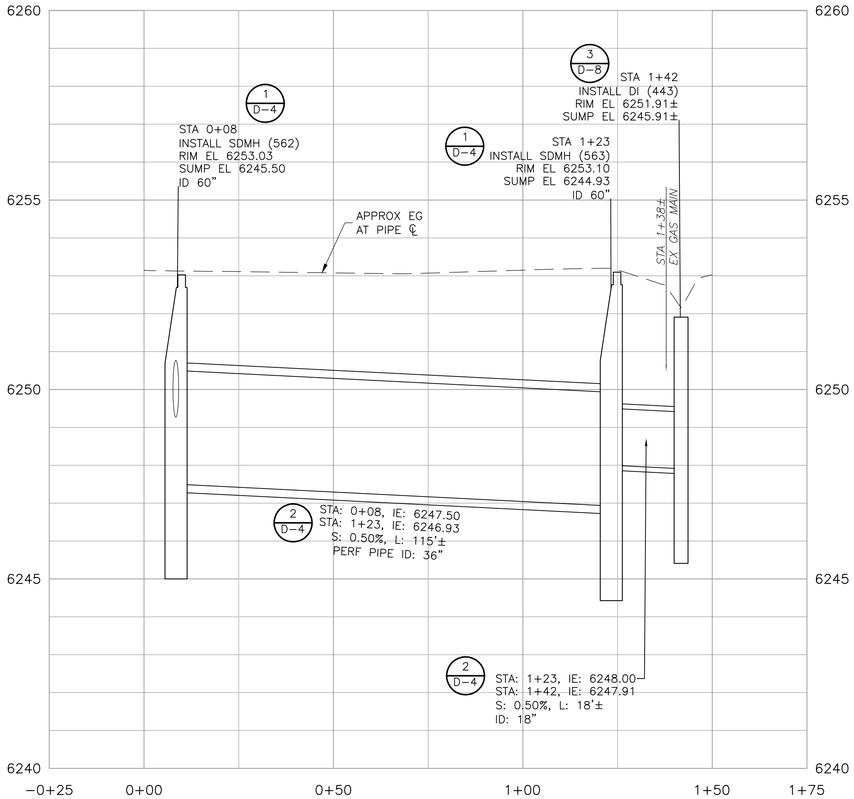

BROCKWAY - (1)

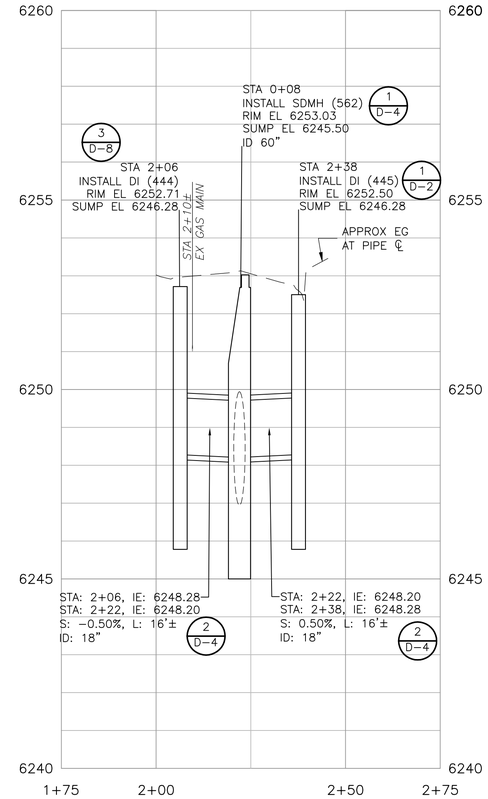

BROCKWAY - (2)

PROFILE SCALES
HORIZ: 1"=20'
VERT: 1"=2'

NOTES:

1. INSTALL CURB DRIVEWAY TRANSITIONS AT ALL DRIVEWAY CROSSINGS UNLESS OTHERWISE INDICATED ON THE PLANS. (5/D-1)
2. INSTALL CURB END TRANSITIONS AT TERMINATIONS OF ALL NEW CURB AND GUTTER SECTIONS. (4/D-1)
3. INSTALL CURB CORNER TRANSITIONS IN ALL LOCATIONS WHERE NEW CURB AND GUTTER CONTINUES AROUND STREET CORNERS. (7/D-1)
4. MATCH EXISTING TOP BACK OF CURB, MATCH FLOW LINE AND INSTALL COLD JOINT TIE-INS WHEN TRANSITIONING TO EXISTING CURB AND GUTTER OR DRIVEWAYS.
5. # SEE SHEETS G-4 & G-5 FOR DATA POINT TABLES.

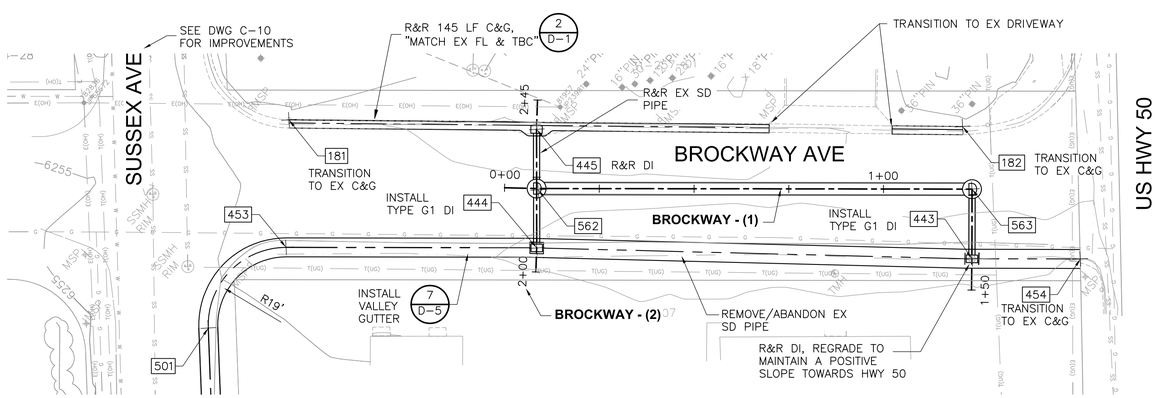

BROCKWAY AVE

PLAN

1" = 20'
10 0 20

100% BID SET

REV	DATE	DESCRIPTION	BY

WARNING
0 1/2" 1"
IF THIS BAR SCALE DOES NOT MEASURE 1" THIS DWG HAS BEEN REDUCED SCALE ACCORDINGLY

CITY OF SOUTH LAKE TAHOE
DEPARTMENT OF PUBLIC WORKS
1052 TATA LANE
SOUTH LAKE TAHOE, CA 96150
Ph: (530) 542-6030 Fax: (541-7524

REGISTERED PROFESSIONAL ENGINEER
No. C80207 Exp. 09/30/16
CIVIL
STATE OF CALIFORNIA

CDM Smith
12313 Soaring Way, Suite 2-D
Truckee, California 96161
Tel (530) 582-7235
Fax (530) 582-1098

DESIGNED BY: RHV
DRAWN BY: OMN
SHEET CHK'D BY: RHV
CROSS CHK'D BY: SLS
DATE: FEBRUARY 20, 2015

SIERRA TRACT PH 3 & 4 EROSION CONTROL PROJECT

SHEET TITLE
BROCKWAY AVE PLAN AND PROFILE

JOB NO. 27497-93981
SCALE: AS NOTED
SHEET 18 OF 57
DWG. NO:
C-11

© 2012 CDM SMITH ALL RIGHTS RESERVED.
REUSE OF DOCUMENTS: THESE DOCUMENTS AND DESIGNS PROVIDED BY PROFESSIONAL SERVICE, INCORPORATED HEREIN, ARE THE PROPERTY OF CDM SMITH AND ARE NOT TO BE USED, IN WHOLE OR PART, FOR ANY OTHER PROJECT WITHOUT THE WRITTEN AUTHORIZATION OF CDM SMITH.

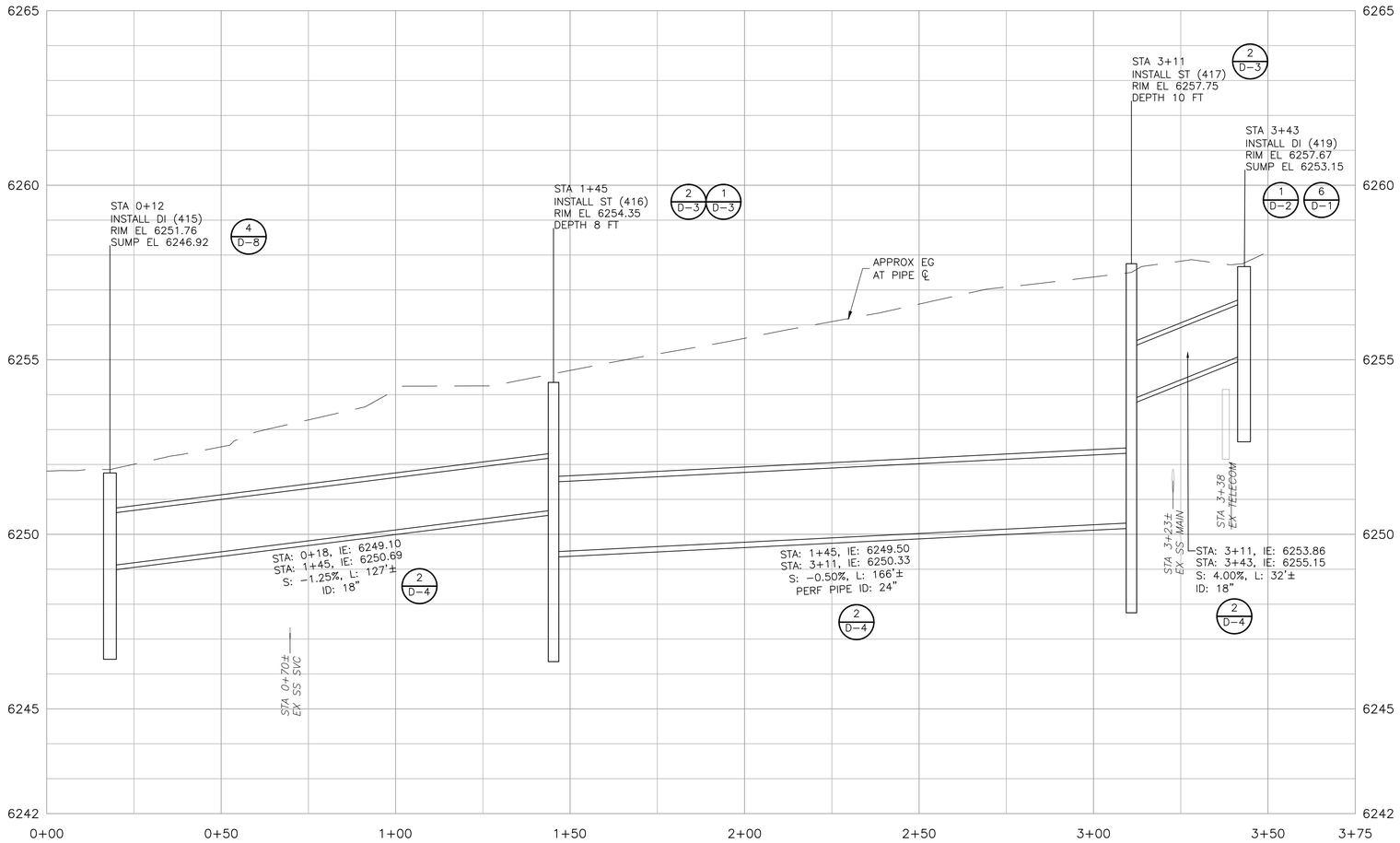

OMALLEY - (1)

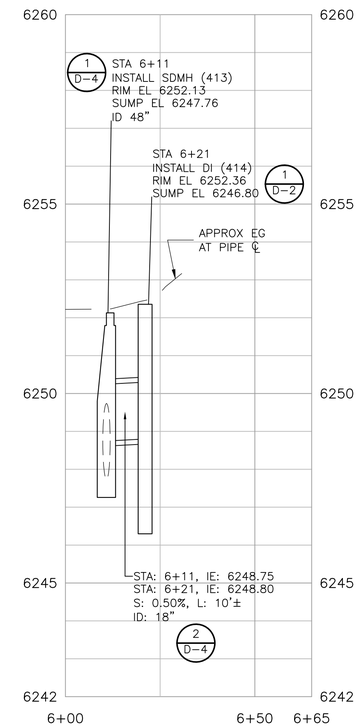

OMALLEY - (2)

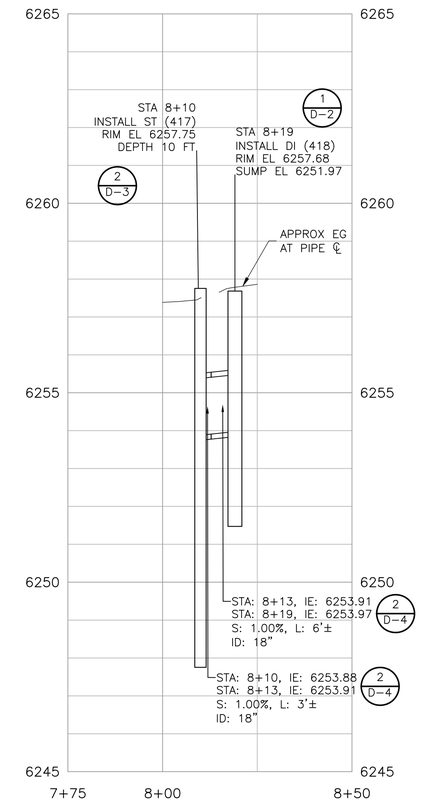

OMALLEY - (3)

PROFILE SCALES
HORIZ: 1"=20'
VERT: 1"=2'

NOTES:

1. INSTALL CURB DRIVEWAY TRANSITIONS AT ALL DRIVEWAY CROSSINGS UNLESS OTHERWISE INDICATED ON THE PLANS. (5 D-1)
2. INSTALL CURB END TRANSITIONS AT TERMINATIONS OF ALL NEW CURB AND GUTTER SECTIONS. (4 D-1)
3. INSTALL CURB CORNER TRANSITIONS IN ALL LOCATIONS WHERE NEW CURB AND GUTTER CONTINUES AROUND STREET CORNERS. (7 D-1)
4. MATCH EXISTING TOP BACK OF CURB, MATCH FLOW LINE AND INSTALL COLD JOINT TIE-INS WHEN TRANSITIONING TO EXISTING CURB AND GUTTER OR DRIVEWAYS.
5. # SEE SHEETS G-4 & G-5 FOR DATA POINT TABLES.

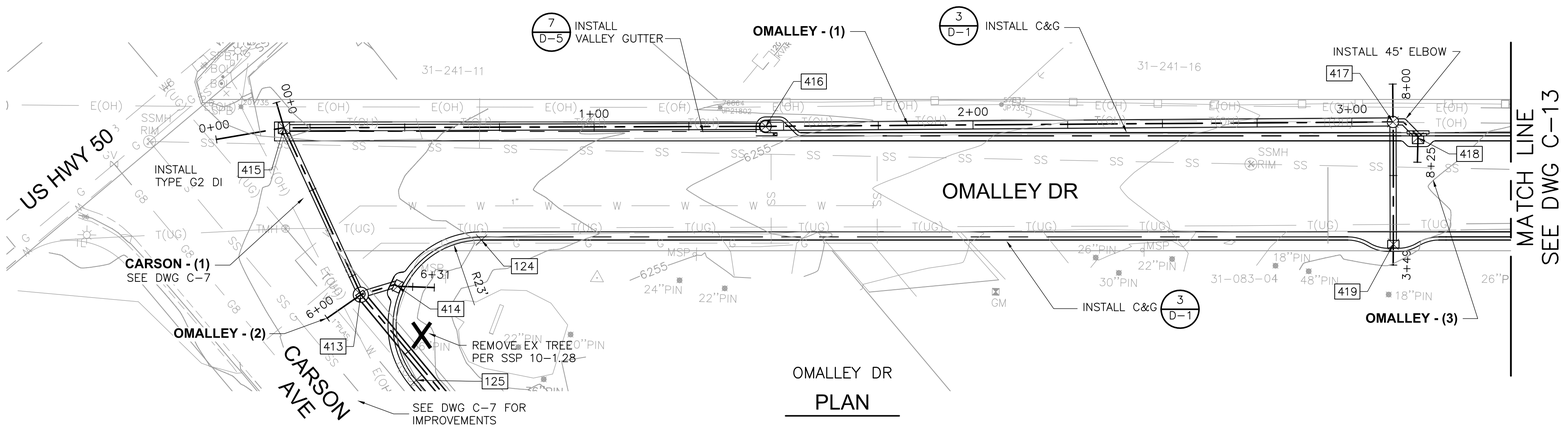

OMALLEY DR
PLAN

N

1" = 20'
10 0 20

100% BID SET

REV	DATE	DESCRIPTION	BY

WARNING
0 1/2" 1"
IF THIS BAR SCALE DOES NOT MEASURE 1" THIS DWG HAS BEEN REDUCED SCALE ACCORDINGLY

CITY OF SOUTH LAKE TAHOE
DEPARTMENT OF PUBLIC WORKS
1052 TATA LANE
SOUTH LAKE TAHOE, CA 96150
Ph: (530) 542-6030 Fax: (530) 541-7524

REGISTERED PROFESSIONAL ENGINEER No. C80207 Exp. 09/30/16 CIVIL STATE OF CALIFORNIA

CDM Smith
12313 Soaring Way, Suite 2-D
Truckee, California 96161
Tel (530) 582-7235
Fax (530) 582-1098

DESIGNED BY: RHV
DRAWN BY: OMN
SHEET CHK'D BY: RHV
CROSS CHK'D BY: SLS
DATE: MAY 8, 2015

SIERRA TRACT PH 3 & 4 EROSION CONTROL PROJECT
SHEET TITLE
OMALLEY DR PLAN AND PROFILE

JOB NO. 27497-93981
SCALE: AS NOTED
SHEET 19 OF 57
DWG. NO:
C-12

© 2012 CDM SMITH ALL RIGHTS RESERVED.
REUSE OF DOCUMENTS: THESE DOCUMENTS AND DESIGNS PROVIDED BY PROFESSIONAL SERVICE, INCORPORATED HEREIN, ARE THE PROPERTY OF CDM SMITH AND ARE NOT TO BE USED, IN WHOLE OR PART, FOR ANY OTHER PROJECT WITHOUT THE WRITTEN AUTHORIZATION OF CDM SMITH.

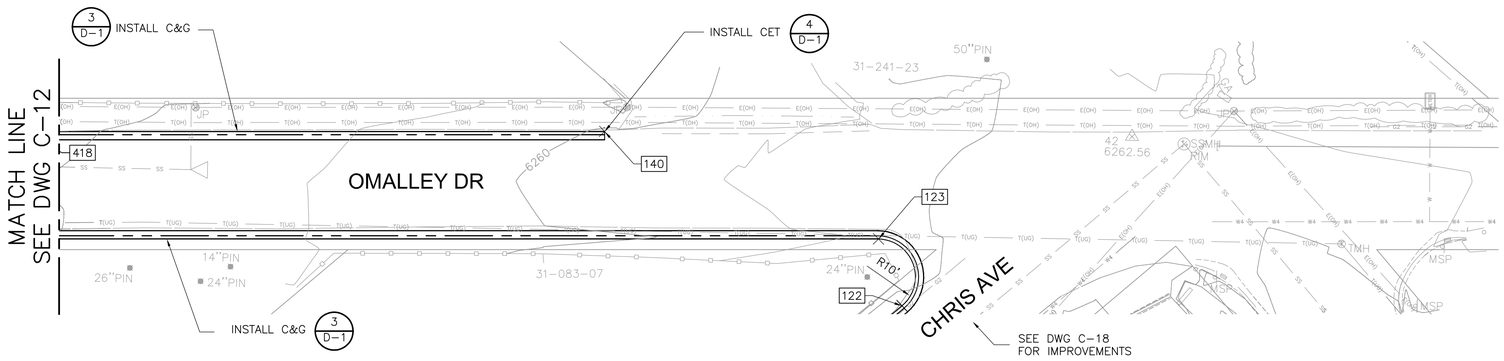

OMALLEY DR

PLAN

NOTES:

1. INSTALL CURB DRIVEWAY TRANSITIONS AT ALL DRIVEWAY CROSSINGS UNLESS OTHERWISE INDICATED ON THE PLANS. (5 / D-1)
2. INSTALL CURB END TRANSITIONS AT TERMINATIONS OF ALL NEW CURB AND GUTTER SECTIONS. (4 / D-1)
3. INSTALL CURB CORNER TRANSITIONS IN ALL LOCATIONS WHERE NEW CURB AND GUTTER CONTINUES AROUND STREET CORNERS. (7 / D-1)
4. MATCH EXISTING TOP BACK OF CURB, MATCH FLOW LINE AND INSTALL COLD JOINT TIE-INS WHEN TRANSITIONING TO EXISTING CURB AND GUTTER OR DRIVEWAYS.
5. # SEE SHEETS G-4 & G-5 FOR DATA POINT TABLES.

N

1" = 20'

10 0 20

100% BID SET

REV	DATE	DESCRIPTION	BY

WARNING

0 1/2" 1"

IF THIS BAR SCALE DOES NOT MEASURE 1" THIS DWG HAS BEEN REDUCED SCALE ACCORDINGLY

CITY OF SOUTH LAKE TAHOE

DEPARTMENT OF PUBLIC WORKS

1052 TATA LANE
SOUTH LAKE TAHOE, CA 96150
Ph: (530) 542-6030 Fax: (530) 541-7524

REGISTERED PROFESSIONAL ENGINEER
RICHARD H. VADEN JR.
No. C80207
Exp. 09/30/16
CIVIL
STATE OF CALIFORNIA

CDM Smith

12313 Soaring Way, Suite 2-D
Truckee, California 96161
Tel (530) 582-7235
Fax (530) 582-1098

DESIGNED BY: RHV
DRAWN BY: OMN
SHEET CHK'D BY: RHV
CROSS CHK'D BY: SLS
DATE: FEBRUARY 20, 2015

SIERRA TRACT PH 3 & 4 EROSION CONTROL PROJECT

SHEET TITLE

OMALLEY DR PLAN

JOB NO. 27497-93981
SCALE: AS NOTED
SHEET 20 OF 57
DWG. NO:
C-13

© 2012 CDM SMITH ALL RIGHTS RESERVED.
REUSE OF DOCUMENTS: THESE DOCUMENTS AND DESIGNS PROVIDED BY PROFESSIONAL SERVICE, INCORPORATED HEREIN, ARE THE PROPERTY OF CDM SMITH AND ARE NOT TO BE USED, IN WHOLE OR PART, FOR ANY OTHER PROJECT WITHOUT THE WRITTEN AUTHORIZATION OF CDM SMITH.

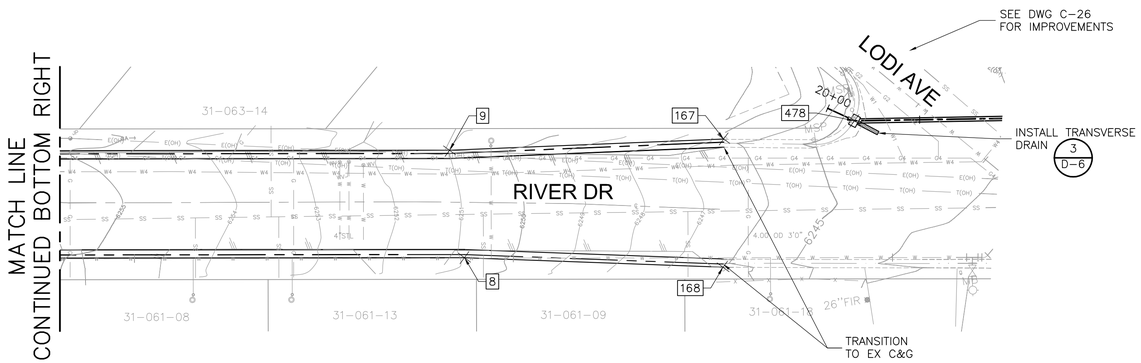

NOTES:

1. INSTALL CURB DRIVEWAY TRANSITIONS AT ALL DRIVEWAY CROSSINGS UNLESS OTHERWISE INDICATED ON THE PLANS. (5/D-1)
2. INSTALL CURB END TRANSITIONS AT TERMINATIONS OF ALL NEW CURB AND GUTTER SECTIONS. (4/D-1)
3. INSTALL CURB CORNER TRANSITIONS IN ALL LOCATIONS WHERE NEW CURB AND GUTTER CONTINUES AROUND STREET CORNERS. (7/D-1)
4. MATCH EXISTING TOP BACK OF CURB, MATCH FLOW LINE AND INSTALL COLD TIE-INS WHEN TRANSITIONING TO EXISTING CURB AND GUTTER OR DRIVEWAYS.
5. # SEE SHEETS G-4 & G-5 FOR DATA POINT TABLES.

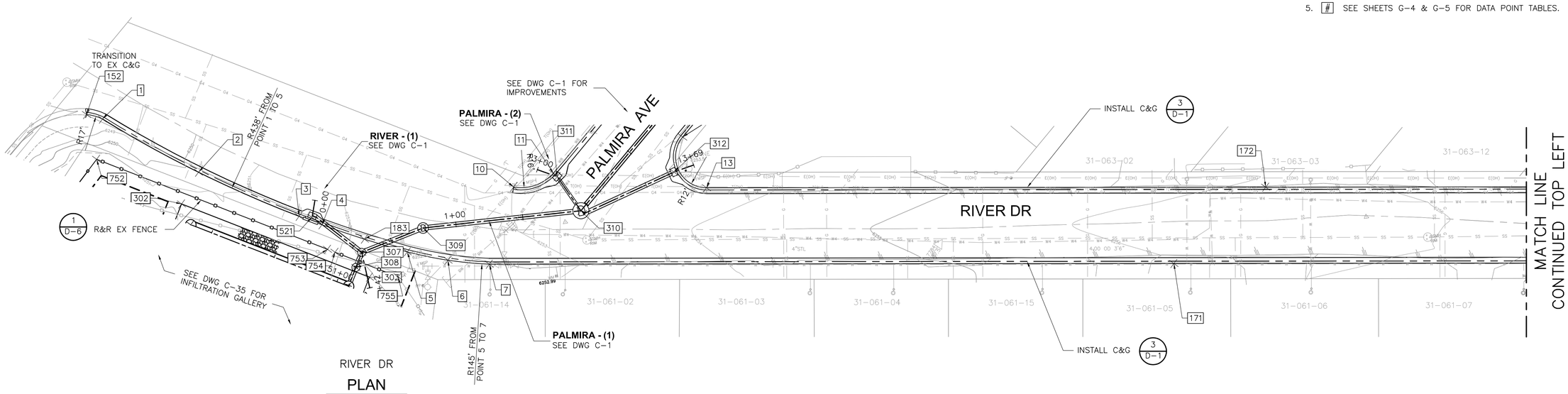

100% BID SET

REV	DATE	DESCRIPTION	BY

WARNING
0 1/2" 1"
IF THIS BAR SCALE DOES NOT MEASURE 1" THIS DWG HAS BEEN REDUCED SCALE ACCORDINGLY

CITY OF SOUTH LAKE TAHOE
DEPARTMENT OF PUBLIC WORKS
1052 TATA LANE
SOUTH LAKE TAHOE, CA 96150
Ph: (530) 542-6030 Fax: (530) 541-7524

REGISTERED PROFESSIONAL ENGINEER
No. C80207
Exp. 09/30/16
CIVIL
STATE OF CALIFORNIA

CDM Smith
12313 Soaring Way, Suite 2-D
Truckee, California 96161
Tel (530) 582-7235
Fax (530) 582-1098

DESIGNED BY: RHV
DRAWN BY: OMN
SHEET CHK'D BY: RHV
CROSS CHK'D BY: SLS
DATE: FEBRUARY 20, 2015

SIERRA TRACT PH 3 & 4 EROSION CONTROL PROJECT
SHEET TITLE
RIVER DR PLAN

JOB NO. 27497-93981
SCALE: AS NOTED
SHEET 21 OF 57
DWG. NO: C-14

©2012 CDM SMITH ALL RIGHTS RESERVED.
REUSE OF DOCUMENTS: THESE DOCUMENTS AND DESIGNS PROVIDED BY PROFESSIONAL SERVICE, INCORPORATED HEREIN, ARE THE PROPERTY OF CDM SMITH AND ARE NOT TO BE USED, IN WHOLE OR PART, FOR ANY OTHER PROJECT WITHOUT THE WRITTEN AUTHORIZATION OF CDM SMITH.

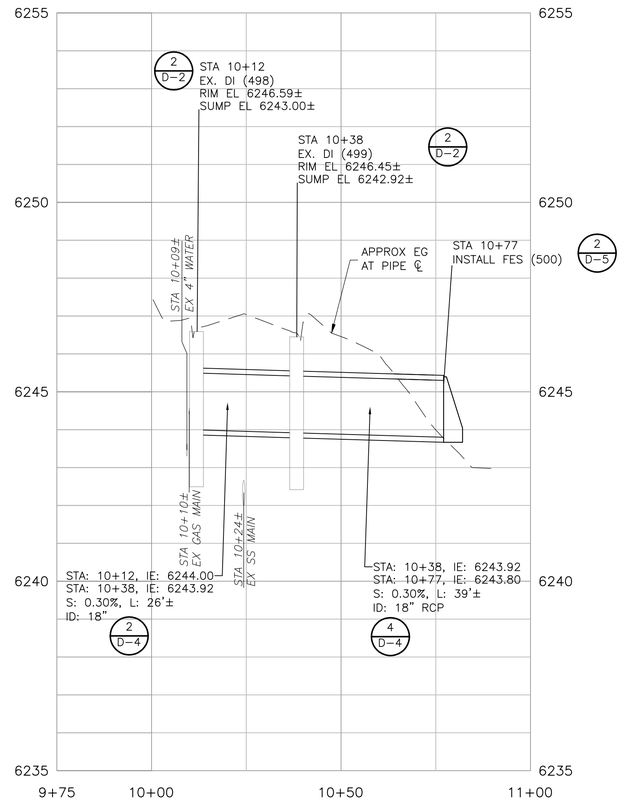

CHRIS - (5)

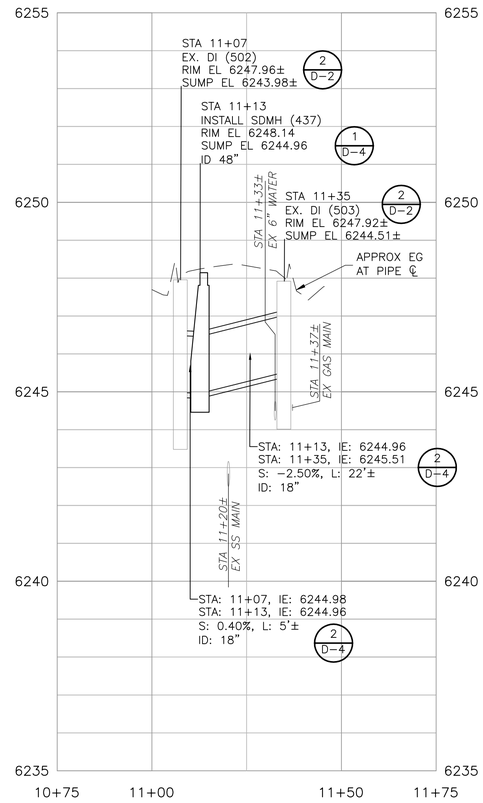

CHRIS - (6)

SEE DWG C-16 FOR PLAN

PROFILE SCALES
HORIZ: 1"=20'
VERT: 1"=2'

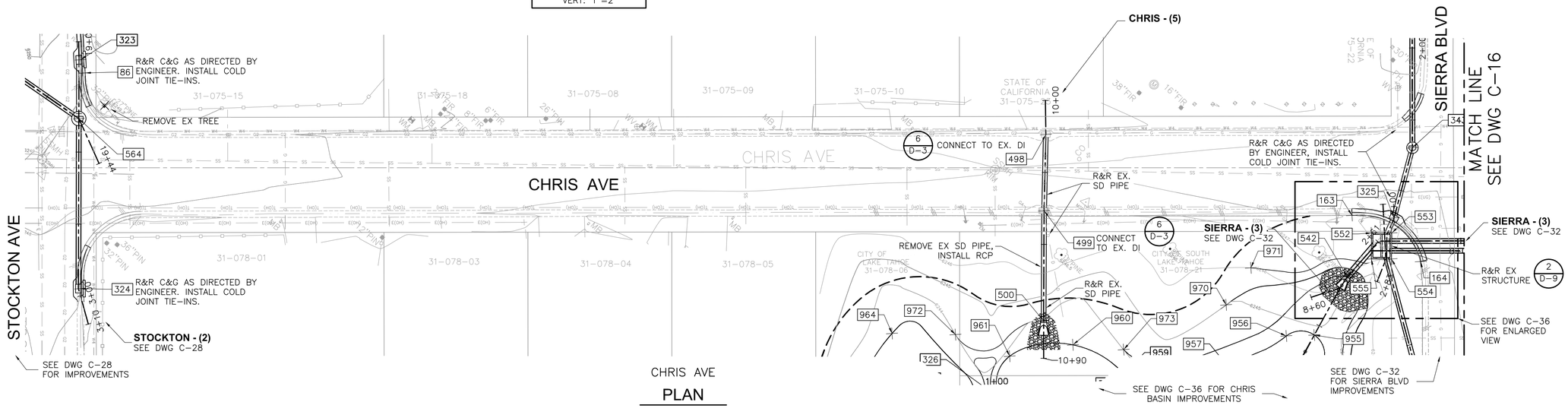

CHRIS AVE

PLAN

NOTES:

1. INSTALL CURB DRIVEWAY TRANSITIONS AT ALL DRIVEWAY CROSSINGS UNLESS OTHERWISE INDICATED ON THE PLANS. (5/D-1)
2. INSTALL CURB END TRANSITIONS AT TERMINATIONS OF ALL NEW CURB AND GUTTER SECTIONS. (4/D-1)
3. INSTALL CURB CORNER TRANSITIONS IN ALL LOCATIONS WHERE NEW CURB AND GUTTER CONTINUES AROUND STREET CORNERS. (7/D-1)
4. MATCH EXISTING TOP BACK OF CURB, MATCH FLOW LINE AND INSTALL COLD JOINT TIE-INS WHEN TRANSITIONING TO EXISTING CURB AND GUTTER OR DRIVEWAYS.
5. # SEE SHEETS G-4 & G-5 FOR DATA POINT TABLES.

1" = 20'
10 0 20

100% BID SET

REV	DATE	DESCRIPTION	BY

WARNING
0 1/2" 1"
IF THIS BAR SCALE DOES NOT MEASURE 1" THIS DWG HAS BEEN REDUCED SCALE ACCORDINGLY

CITY OF SOUTH LAKE TAHOE
DEPARTMENT OF PUBLIC WORKS
1052 TATA LANE
SOUTH LAKE TAHOE, CA 96150
Ph: (530) 542-6030 Fax: (530) 541-7524

REGISTERED PROFESSIONAL ENGINEER No. C80207 Exp. 09/30/16 CIVIL STATE OF CALIFORNIA

CDM Smith
12313 Soaring Way, Suite 2-D
Truckee, California 96161
Tel (530) 582-7235
Fax (530) 582-1098

DESIGNED BY: RHV
DRAWN BY: OMN
SHEET CHK'D BY: RHV
CROSS CHK'D BY: SLS
DATE: FEBRUARY 20, 2015

SIERRA TRACT PH 3 & 4 EROSION CONTROL PROJECT
SHEET TITLE
CHRIS AVE PLAN

JOB NO. 27497-93981
SCALE: AS NOTED
SHEET 22 OF 57
DWG. NO: C-15

©2012 CDM SMITH ALL RIGHTS RESERVED.
REUSE OF DOCUMENTS: THESE DOCUMENTS AND DESIGNS PROVIDED BY PROFESSIONAL SERVICE, INCORPORATED HEREIN, ARE THE PROPERTY OF CDM SMITH AND ARE NOT TO BE USED, IN WHOLE OR PART, FOR ANY OTHER PROJECT WITHOUT THE WRITTEN AUTHORIZATION OF CDM SMITH.

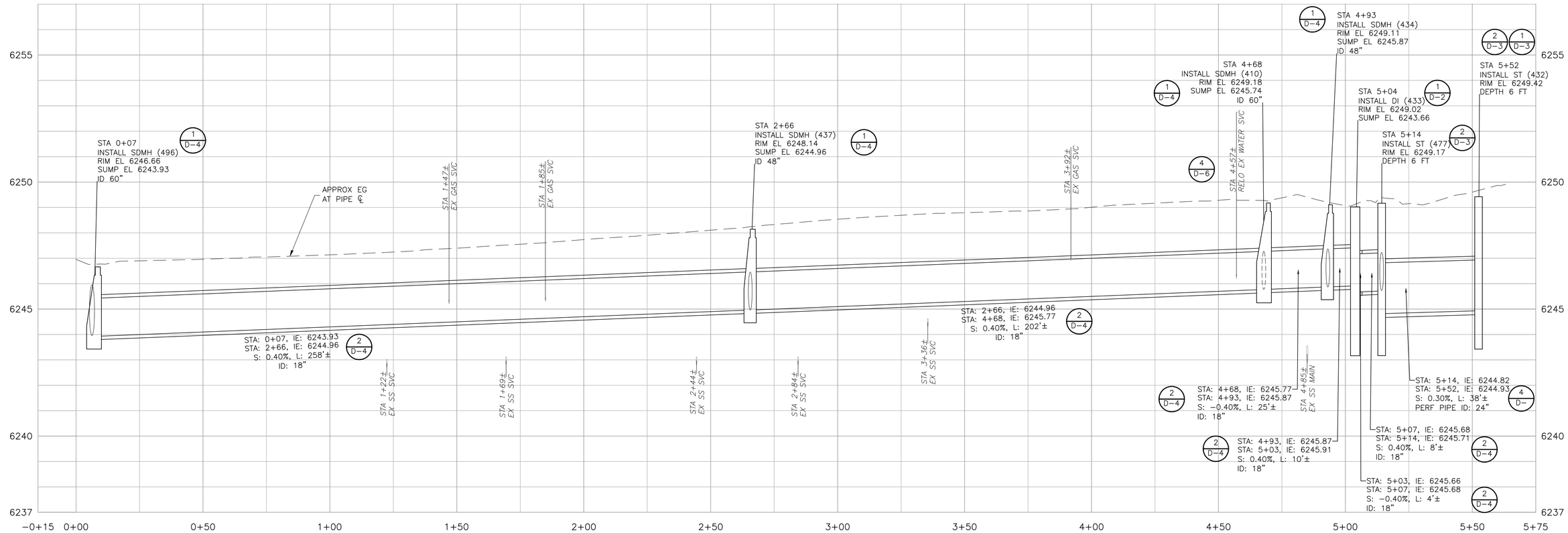

CHRIS - (1)

PROFILE SCALES
HORIZ: 1"=20'
VERT: 1"=2'

NOTES:

1. INSTALL CURB DRIVEWAY TRANSITIONS AT ALL DRIVEWAY CROSSINGS UNLESS OTHERWISE INDICATED ON THE PLANS.
2. INSTALL CURB END TRANSITIONS AT TERMINATIONS OF ALL NEW CURB AND GUTTER SECTIONS.
3. INSTALL CURB CORNER TRANSITIONS IN ALL LOCATIONS WHERE NEW CURB AND GUTTER CONTINUES AROUND STREET CORNERS.
4. MATCH EXISTING TOP BACK OF CURB, MATCH FLOW LINE AND INSTALL COLD JOINT TIE-INS WHEN TRANSITIONING TO EXISTING CURB AND GUTTER OR DRIVEWAYS.
5. # SEE SHEETS G-4 & G-5 FOR DATA POINT TABLES.

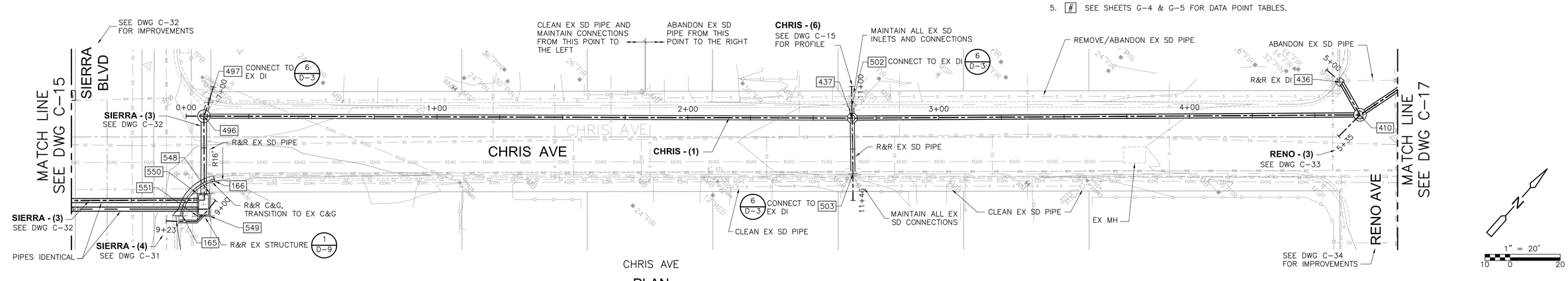

CHRIS AVE

PLAN

100% BID SET

REV	DATE	DESCRIPTION	BY

WARNING
0 1/2" 1"
IF THIS BAR SCALE DOES NOT MEASURE 1" THIS DWG HAS BEEN REDUCED SCALE ACCORDINGLY

CITY OF SOUTH LAKE TAHOE
DEPARTMENT OF PUBLIC WORKS
1052 TATA LANE
SOUTH LAKE TAHOE, CA 96150
Ph: (530) 542-6030 Fax: (530) 541-7524

REGISTERED PROFESSIONAL ENGINEER
RICHARD H. VADEN JR.
No. C80207
Exp. 09/30/16
CIVIL
STATE OF CALIFORNIA

CDM Smith
12313 Soaring Way, Suite 2-D
Truckee, California 96161
Tel (530) 582-7235
Fax (530) 582-1098

DESIGNED BY: RHV
DRAWN BY: OMN
SHEET CHK'D BY: RHV
CROSS CHK'D BY: SLS
DATE: FEBRUARY 20, 2015

SIERRA TRACT PH 3 & 4 EROSION CONTROL PROJECT
SHEET TITLE
CHRIS AVE PLAN

JOB NO. 27497-93981
SCALE: AS NOTED
SHEET 23 OF 57
DWG. NO:
C-16

©2012 CDM SMITH ALL RIGHTS RESERVED.
REUSE OF DOCUMENTS: THESE DOCUMENTS AND DESIGNS PROVIDED BY PROFESSIONAL SERVICE, INCORPORATED HEREIN, ARE THE PROPERTY OF CDM SMITH AND ARE NOT TO BE USED, IN WHOLE OR PART, FOR ANY OTHER PROJECT WITHOUT THE WRITTEN AUTHORIZATION OF CDM SMITH.

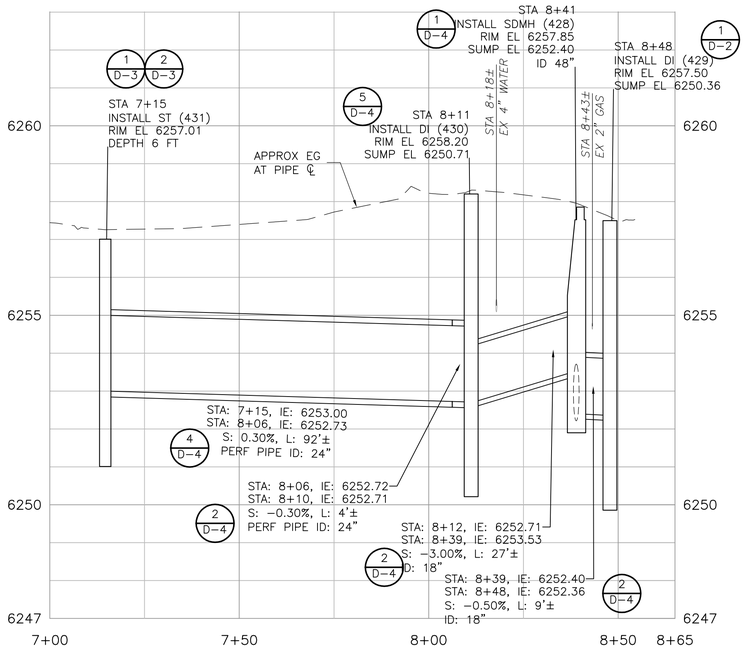

CHRIS - (2)

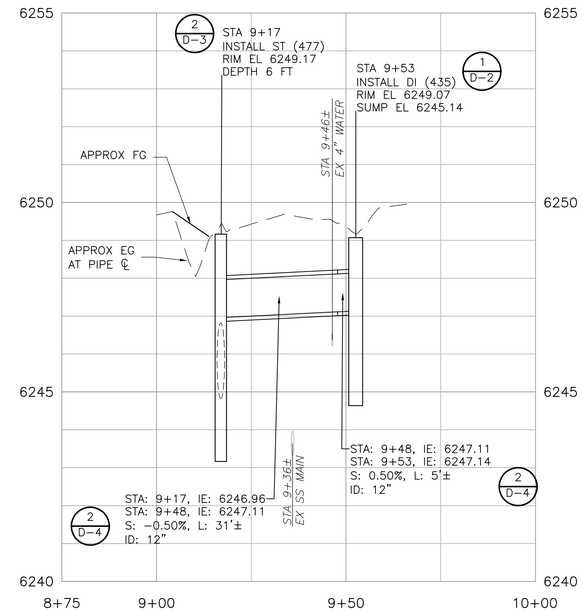

CHRIS - (4)

PROFILE SCALES
HORIZ: 1"=20'
VERT: 1"=2'

NOTES:

1. INSTALL CURB DRIVEWAY TRANSITIONS AT ALL DRIVEWAY CROSSINGS UNLESS OTHERWISE INDICATED ON THE PLANS. (5/D-1)
2. INSTALL CURB END TRANSITIONS AT TERMINATIONS OF ALL NEW CURB AND GUTTER SECTIONS. (4/D-1)
3. INSTALL CURB CORNER TRANSITIONS IN ALL LOCATIONS WHERE NEW CURB AND GUTTER CONTINUES AROUND STREET CORNERS. (7/D-1)
4. MATCH EXISTING TOP BACK OF CURB, MATCH FLOW LINE AND INSTALL COLD JOINT TIE-INS WHEN TRANSITIONING TO EXISTING CURB AND GUTTER OR DRIVEWAYS.
5. # SEE SHEETS G-4 & G-5 FOR DATA POINT TABLES.

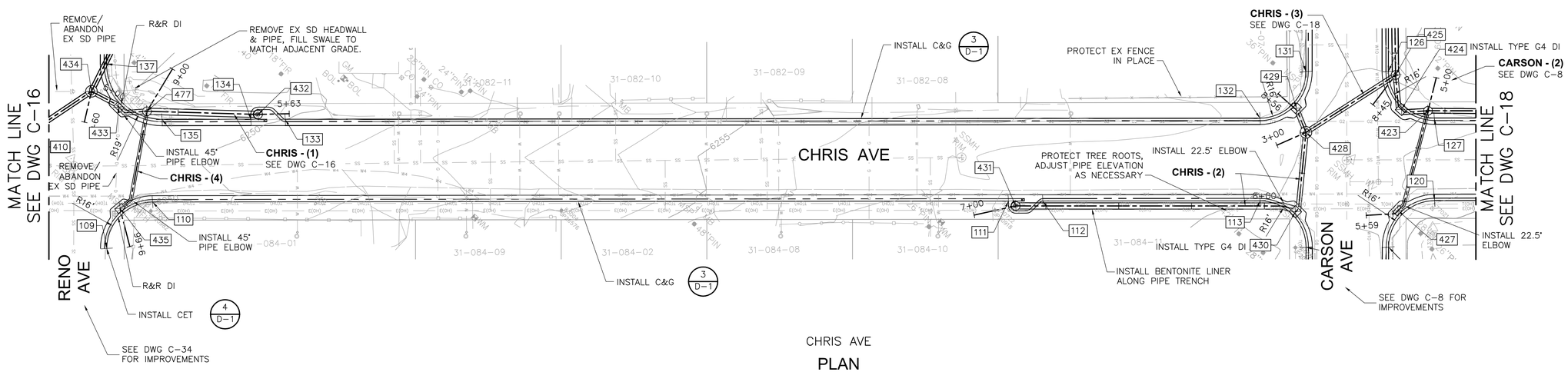

CHRIS AVE

PLAN

100% BID SET

REV	DATE	DESCRIPTION	BY

WARNING
0 1/2" 1"
IF THIS BAR SCALE DOES NOT MEASURE 1" THIS DWG HAS BEEN REDUCED SCALE ACCORDINGLY

CITY OF SOUTH LAKE TAHOE
DEPARTMENT OF PUBLIC WORKS
1052 TATA LANE
SOUTH LAKE TAHOE, CA 96150
Ph: (530) 542-6030 Fax: (530) 541-7524

REGISTERED PROFESSIONAL ENGINEER No. C80207 Exp. 09/30/16 CIVIL STATE OF CALIFORNIA

CDM Smith
12313 Soaring Way, Suite 2-D
Truckee, California 96161
Tel (530) 582-7235
Fax (530) 582-1098

DESIGNED BY: RHV
DRAWN BY: OMN
SHEET CHK'D BY: RHV
CROSS CHK'D BY: SLS
DATE: FEBRUARY 20, 2015

SIERRA TRACT PH 3 & 4 EROSION CONTROL PROJECT
SHEET TITLE
CHRIS AVE PLAN

JOB NO. 27497-93981
SCALE: AS NOTED
SHEET 24 OF 57
DWG. NO: C-17

© 2012 CDM SMITH ALL RIGHTS RESERVED.
REUSE OF DOCUMENTS: THESE DOCUMENTS AND DESIGNS PROVIDED BY PROFESSIONAL SERVICE, INCORPORATED HEREIN, ARE THE PROPERTY OF CDM SMITH AND ARE NOT TO BE USED, IN WHOLE OR PART, FOR ANY OTHER PROJECT WITHOUT THE WRITTEN AUTHORIZATION OF CDM SMITH.

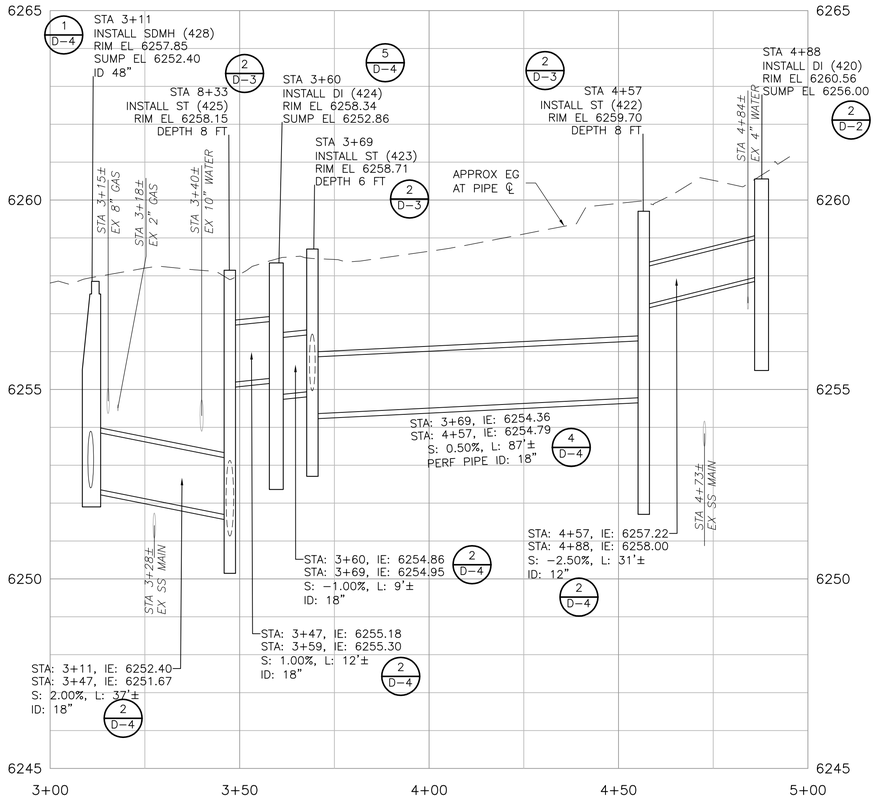

CHRIS - (3)

PROFILE SCALES
HORIZ: 1"=20'
VERT: 1"=2'

NOTES:

1. INSTALL CURB DRIVEWAY TRANSITIONS AT ALL DRIVEWAY CROSSINGS UNLESS OTHERWISE INDICATED ON THE PLANS. (5/D-1)
2. INSTALL CURB END TRANSITIONS AT TERMINATIONS OF ALL NEW CURB AND GUTTER SECTIONS. (4/D-1)
3. INSTALL CURB CORNER TRANSITIONS IN ALL LOCATIONS WHERE NEW CURB AND GUTTER CONTINUES AROUND STREET CORNERS. (7/D-1)
4. MATCH EXISTING TOP BACK OF CURB, MATCH FLOW LINE AND INSTALL COLD JOINT TIE-INS WHEN TRANSITIONING TO EXISTING CURB AND GUTTER OR DRIVEWAYS.
5. # SEE SHEETS G-4 & G-5 FOR DATA POINT TABLES.

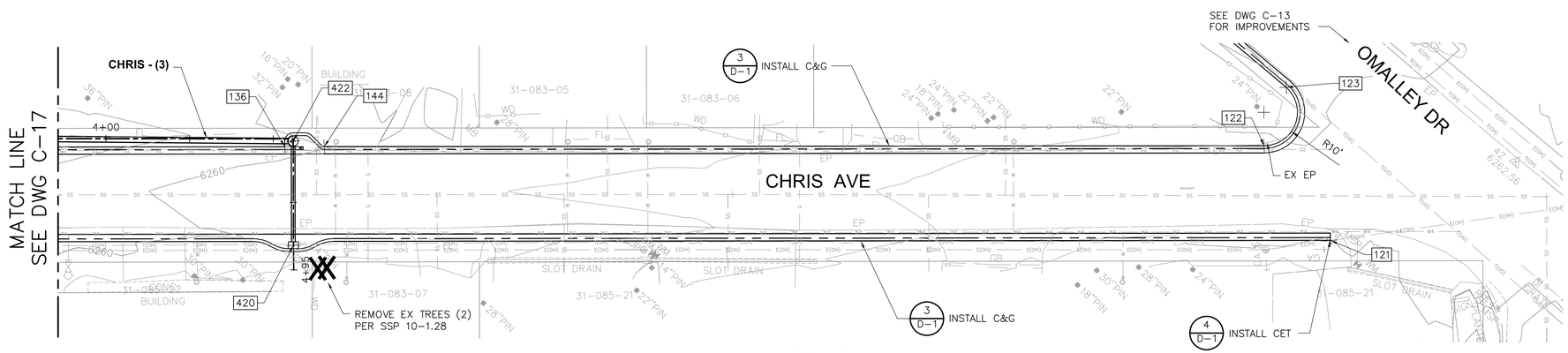

CHRIS AVE

PLAN

1" = 20'
10 0 20

100% BID SET

REV	DATE	DESCRIPTION	BY

WARNING
0 1/2" 1"
IF THIS BAR SCALE DOES NOT MEASURE 1" THIS DWG HAS BEEN REDUCED SCALE ACCORDINGLY

CITY OF SOUTH LAKE TAHOE
DEPARTMENT OF PUBLIC WORKS
1052 TATA LANE
SOUTH LAKE TAHOE, CA 96150
Ph: (530) 542-6030 Fax: (530) 541-7524

REGISTERED PROFESSIONAL ENGINEER No. C80207 Exp. 09/30/16 CIVIL STATE OF CALIFORNIA

CDM Smith
12313 Soaring Way, Suite 2-D
Truckee, California 96161
Tel (530) 582-7235
Fax (530) 582-1098

DESIGNED BY: RHV
DRAWN BY: OMN
SHEET CHK'D BY: RHV
CROSS CHK'D BY: SLS
DATE: FEBRUARY 20, 2015

SIERRA TRACT PH 3 & 4 EROSION CONTROL PROJECT
SHEET TITLE
CHRIS AVE PLAN

JOB NO. 27497-93981
SCALE: AS NOTED
SHEET 25 OF 57
DWG. NO:
C-18

© 2012 CDM SMITH ALL RIGHTS RESERVED.
REUSE OF DOCUMENTS: THESE DOCUMENTS AND DESIGNS PROVIDED BY PROFESSIONAL SERVICE, INCORPORATED HEREIN, ARE THE PROPERTY OF CDM SMITH AND ARE NOT TO BE USED, IN WHOLE OR PART, FOR ANY OTHER PROJECT WITHOUT THE WRITTEN AUTHORIZATION OF CDM SMITH.

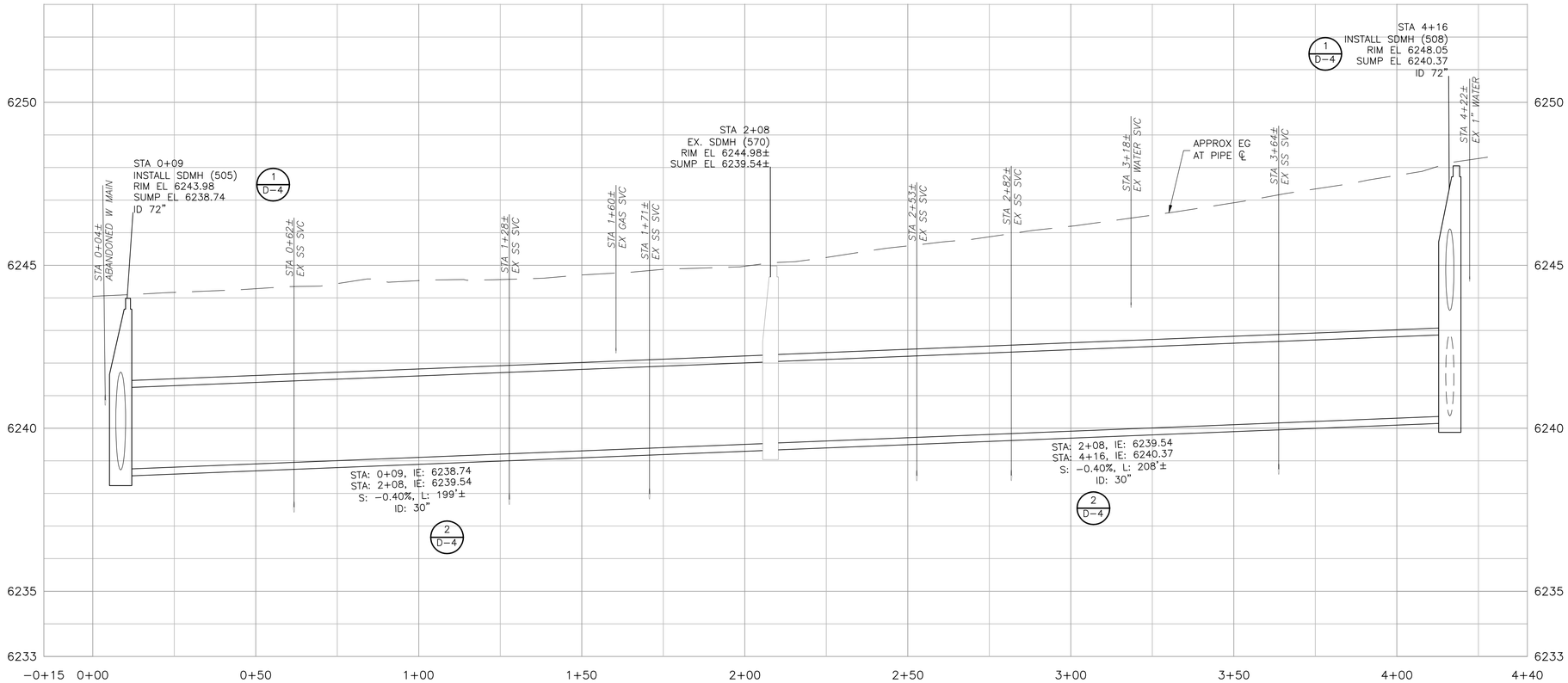

WILLIAM - (1)

PROFILE SCALES
HORIZ: 1"=20'
VERT: 1"=2'

NOTES:

1. INSTALL CURB DRIVEWAY TRANSITIONS AT ALL DRIVEWAY CROSSINGS UNLESS OTHERWISE INDICATED ON THE PLANS. (5 / D-1)
2. INSTALL CURB END TRANSITIONS AT TERMINATIONS OF ALL NEW CURB AND GUTTER SECTIONS. (4 / D-1)
3. INSTALL CURB CORNER TRANSITIONS IN ALL LOCATIONS WHERE NEW CURB AND GUTTER CONTINUES AROUND STREET CORNERS. (7 / D-1)
4. MATCH EXISTING TOP BACK OF CURB, MATCH FLOW LINE AND INSTALL COLD JOINT TIE-INS WHEN TRANSITIONING TO EXISTING CURB AND GUTTER OR DRIVEWAYS.
5. # SEE SHEETS G-4 & G-5 FOR DATA POINT TABLES.

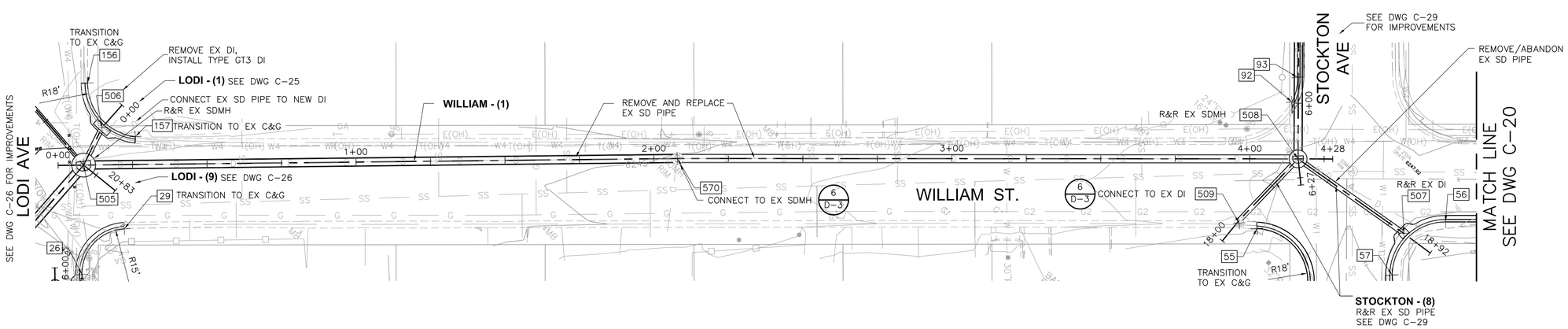

WILLIAM ST.

PLAN

1" = 20'
10 0 20

100% BID SET

REV	DATE	DESCRIPTION	BY

WARNING
0 1/2" 1"
IF THIS BAR SCALE DOES NOT MEASURE 1" THIS DWG HAS BEEN REDUCED SCALE ACCORDINGLY

CITY OF SOUTH LAKE TAHOE
DEPARTMENT OF PUBLIC WORKS
1052 TATA LANE
SOUTH LAKE TAHOE, CA 96150
Ph: (530) 542-6030 Fax: (530) 541-7524

REGISTERED PROFESSIONAL ENGINEER
No. C80207 Exp. 09/30/16
CIVIL
STATE OF CALIFORNIA

CDM Smith
12313 Soaring Way, Suite 2-D
Truckee, California 96161
Tel (530) 582-7235
Fax (530) 582-1098

DESIGNED BY: RHV
DRAWN BY: OMN
SHEET CHK'D BY: RHV
CROSS CHK'D BY: SLS
DATE: FEBRUARY 20, 2015

SIERRA TRACT PH 3 & 4 EROSION CONTROL PROJECT
SHEET TITLE
WILLIAM AVE PLAN AND PROFILE

JOB NO. 27497-93981
SCALE: AS NOTED
SHEET 26 OF 57
DWG. NO:
C-19

© 2012 CDM SMITH ALL RIGHTS RESERVED.
REUSE OF DOCUMENTS: THESE DOCUMENTS AND DESIGNS PROVIDED BY PROFESSIONAL SERVICE, INCORPORATED HEREIN, ARE THE PROPERTY OF CDM SMITH AND ARE NOT TO BE USED, IN WHOLE OR PART, FOR ANY OTHER PROJECT WITHOUT THE WRITTEN AUTHORIZATION OF CDM SMITH.

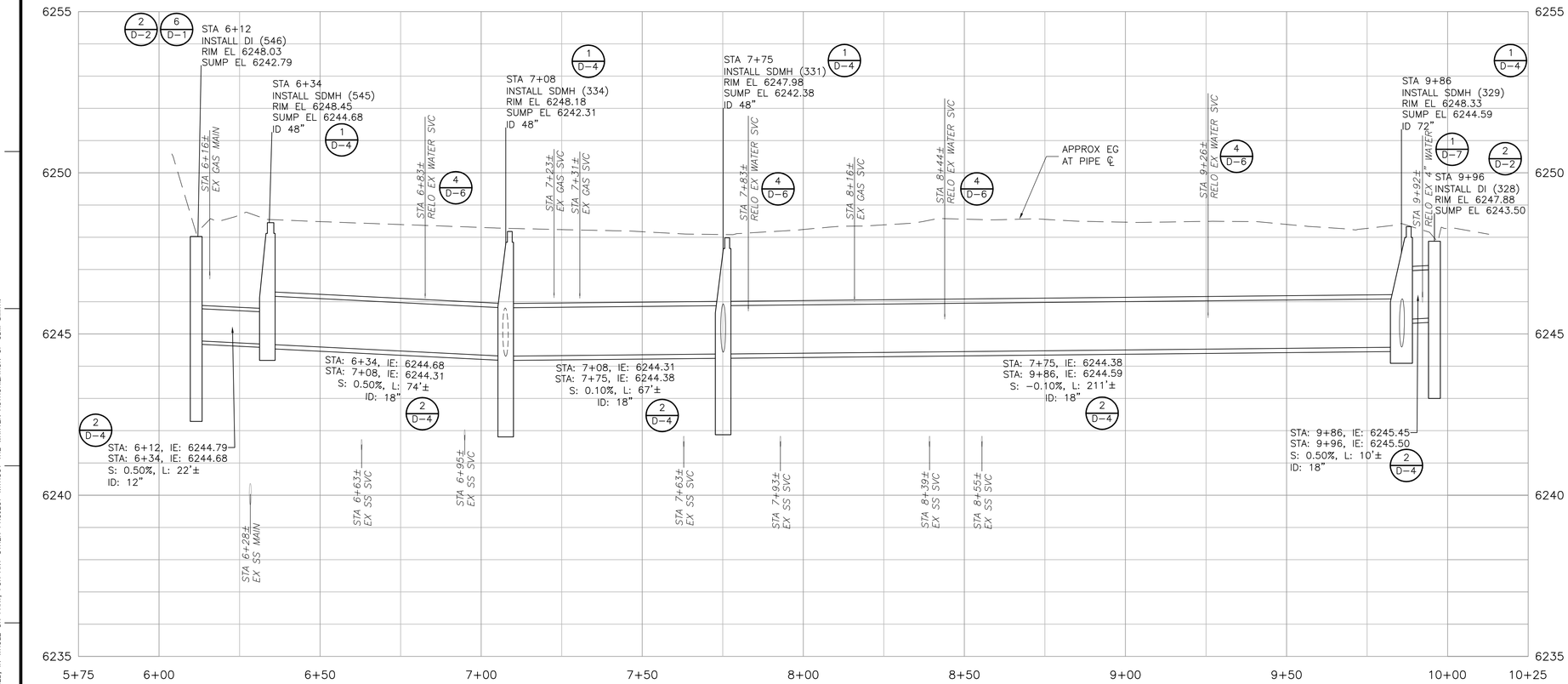

WILLIAM - (2)

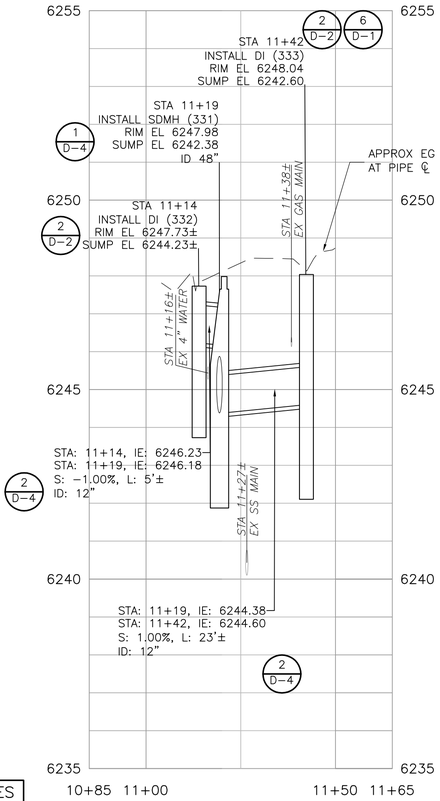

WILLIAM - (3)

PROFILE SCALES
HORIZ: 1"=20'
VERT: 1"=2'

NOTES:

1. INSTALL CURB DRIVEWAY TRANSITIONS AT ALL DRIVEWAY CROSSINGS UNLESS OTHERWISE INDICATED ON THE PLANS. (5/D-1)
2. INSTALL CURB END TRANSITIONS AT TERMINATIONS OF ALL NEW CURB AND GUTTER SECTIONS. (4/D-1)
3. INSTALL CURB CORNER TRANSITIONS IN ALL LOCATIONS WHERE NEW CURB AND GUTTER CONTINUES AROUND STREET CORNERS. (7/D-1)
4. MATCH EXISTING TOP BACK OF CURB, MATCH FLOW LINE AND INSTALL COLD JOINT TIE-INS WHEN TRANSITIONING TO EXISTING CURB AND GUTTER OR DRIVEWAYS.
5. [#] SEE SHEETS G-4 & G-5 FOR DATA POINT TABLES.

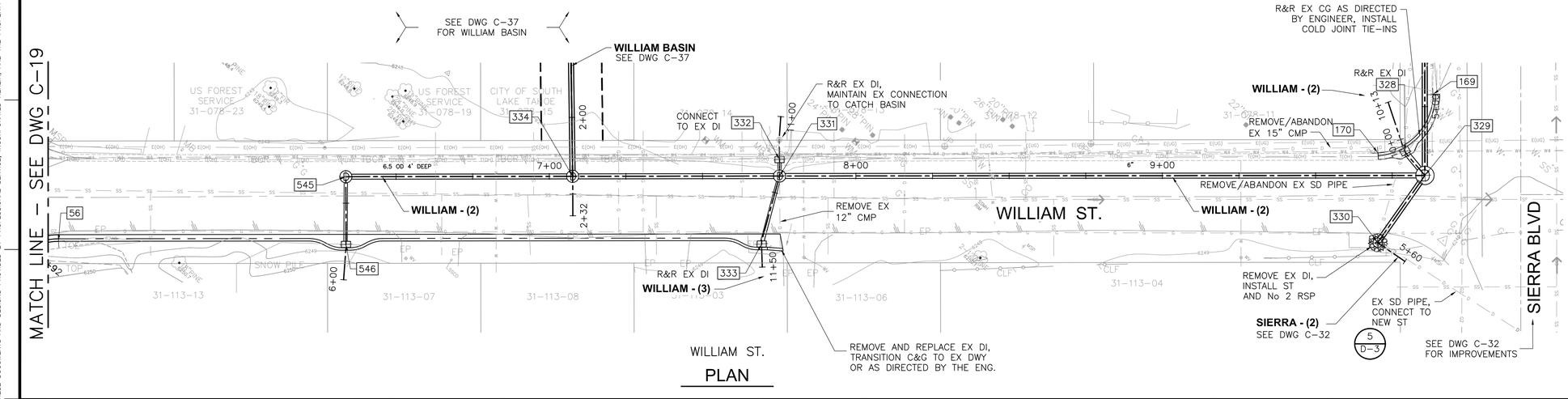

WILLIAM ST.
PLAN

1" = 20'
10 0 20

100% BID SET

REV	DATE	DESCRIPTION	BY

WARNING
0 1/2" 1"
IF THIS BAR SCALE DOES NOT MEASURE 1" THIS DWG HAS BEEN REDUCED SCALE ACCORDINGLY

CITY OF SOUTH LAKE TAHOE
DEPARTMENT OF PUBLIC WORKS
1052 TATA LANE
SOUTH LAKE TAHOE, CA 96150
Ph: (530) 542-6030 Fax: (530) 541-7524

REGISTERED PROFESSIONAL ENGINEER No. C80207 Exp. 09/30/16 CIVIL STATE OF CALIFORNIA

CDM Smith
12313 Soaring Way, Suite 2-D
Truckee, California 96161
Tel (530) 582-7235
Fax (530) 582-1098

DESIGNED BY: RHV
DRAWN BY: OMN
SHEET CHK'D BY: RHV
CROSS CHK'D BY: SLS
DATE: FEBRUARY 20, 2015

SIERRA TRACT PH 3 & 4 EROSION CONTROL PROJECT
SHEET TITLE
WILLIAM AVE PLAN AND PROFILE

JOB NO. 27497-93981
SCALE: AS NOTED
SHEET 27 OF 57
DWG. NO: C-20

© 2012 CDM SMITH ALL RIGHTS RESERVED.
REUSE OF DOCUMENTS: THESE DOCUMENTS AND DESIGNS PROVIDED BY PROFESSIONAL SERVICE, INCORPORATED HEREIN, ARE THE PROPERTY OF CDM SMITH AND ARE NOT TO BE USED, IN WHOLE OR PART, FOR ANY OTHER PROJECT WITHOUT THE WRITTEN AUTHORIZATION OF CDM SMITH.

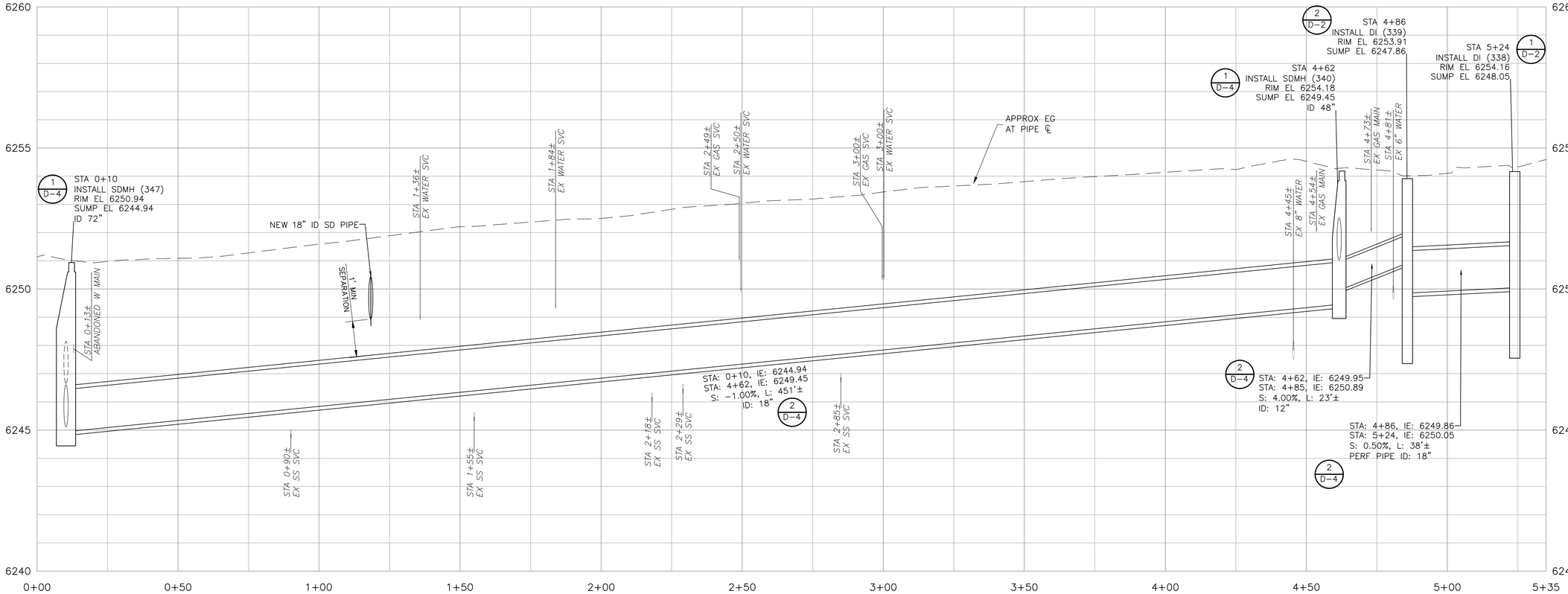

ELWOOD - (1)

PROFILE SCALES
HORIZ: 1"=20'
VERT: 1"=2'

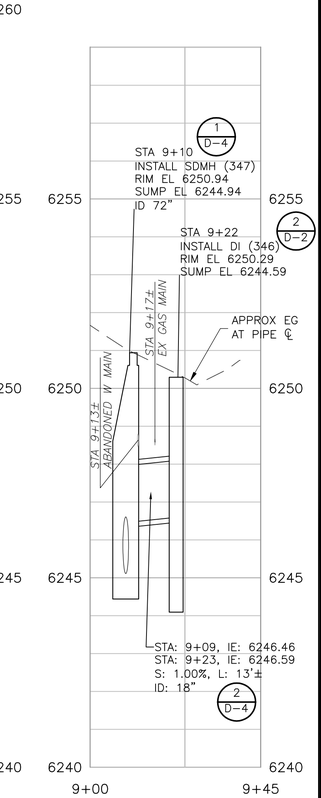

ELWOOD - (2)

NOTES:

1. INSTALL CURB DRIVEWAY TRANSITIONS AT ALL DRIVEWAY CROSSINGS UNLESS OTHERWISE INDICATED ON THE PLANS. (5/D-1)
2. INSTALL CURB END TRANSITIONS AT TERMINATIONS OF ALL NEW CURB AND GUTTER SECTIONS. (4/D-1)
3. INSTALL CURB CORNER TRANSITIONS IN ALL LOCATIONS WHERE NEW CURB AND GUTTER CONTINUES AROUND STREET CORNERS. (7/D-1)
4. MATCH EXISTING TOP BACK OF CURB, MATCH FLOW LINE AND INSTALL COLD JOINT TIE-INS WHEN TRANSITIONING TO EXISTING CURB AND GUTTER OR DRIVEWAYS.
5. # SEE SHEETS G-4 & G-5 FOR DATA POINT TABLES.

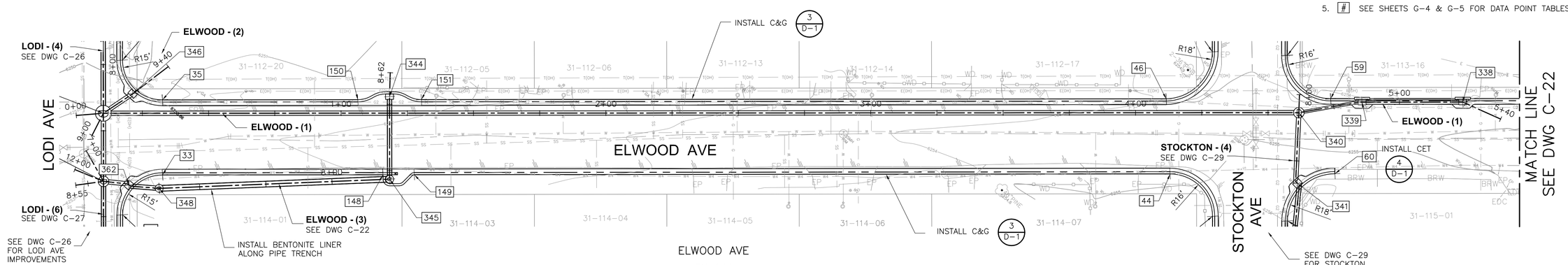

ELWOOD AVE

PLAN

100% BID SET

REV	DATE	DESCRIPTION	BY

WARNING
0 1/2" 1"
IF THIS BAR SCALE DOES NOT MEASURE 1" THIS DWG HAS BEEN REDUCED SCALE ACCORDINGLY

CITY OF SOUTH LAKE TAHOE
DEPARTMENT OF PUBLIC WORKS
1052 TATA LANE
SOUTH LAKE TAHOE, CA 96150
Ph: (530) 542-6030 Fax: (530) 541-7524

REGISTERED PROFESSIONAL ENGINEER No. C80207 Exp. 09/30/16 CIVIL STATE OF CALIFORNIA

CDM Smith
12313 Soaring Way, Suite 2-D
Truckee, California 96161
Tel (530) 582-7235
Fax (530) 582-1098

DESIGNED BY: RHV
DRAWN BY: OMN
SHEET CHK'D BY: RHV
CROSS CHK'D BY: SLS
DATE: FEBRUARY 20, 2015

SIERRA TRACT PH 3 & 4 EROSION CONTROL PROJECT
SHEET TITLE
ELWOOD AVE PLAN AND PROFILE

JOB NO. 27497-93981
SCALE: AS NOTED
SHEET 28 OF 57
DWG. NO:
C-21

© 2012 CDM SMITH ALL RIGHTS RESERVED.
REUSE OF DOCUMENTS: THESE DOCUMENTS AND DESIGNS PROVIDED BY PROFESSIONAL SERVICE, INCORPORATED HEREIN, ARE THE PROPERTY OF CDM SMITH AND ARE NOT TO BE USED, IN WHOLE OR PART, FOR ANY OTHER PROJECT WITHOUT THE WRITTEN AUTHORIZATION OF CDM SMITH.

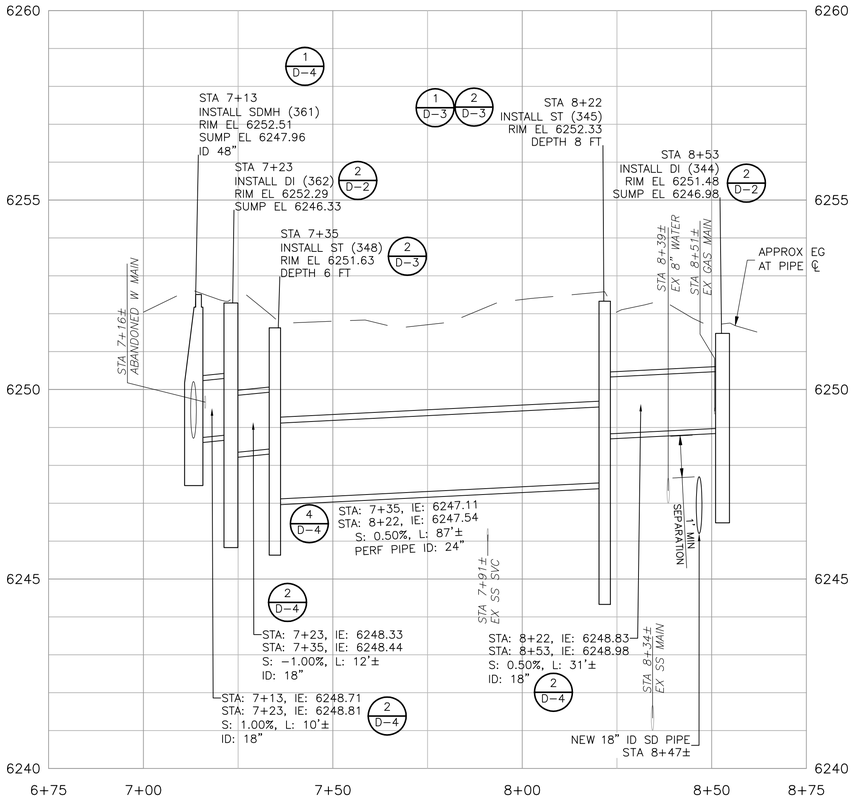

ELWOOD - (3)

SEE DWG C-21 FOR PLAN VIEW

PROFILE SCALES
HORIZ: 1"=20'
VERT: 1"=2'

NOTES:

1. INSTALL CURB DRIVEWAY TRANSITIONS AT ALL DRIVEWAY CROSSINGS UNLESS OTHERWISE INDICATED ON THE PLANS. (5/D-1)
2. INSTALL CURB END TRANSITIONS AT TERMINATIONS OF ALL NEW CURB AND GUTTER SECTIONS. (4/D-1)
3. INSTALL CURB CORNER TRANSITIONS IN ALL LOCATIONS WHERE NEW CURB AND GUTTER CONTINUES AROUND STREET CORNERS. (7/D-1)
4. MATCH EXISTING TOP BACK OF CURB, MATCH FLOW LINE AND INSTALL COLD JOINT TIE-INS WHEN TRANSITIONING TO EXISTING CURB AND GUTTER OR DRIVEWAYS.
5. # SEE SHEETS G-4 & G-5 FOR DATA POINT TABLES.

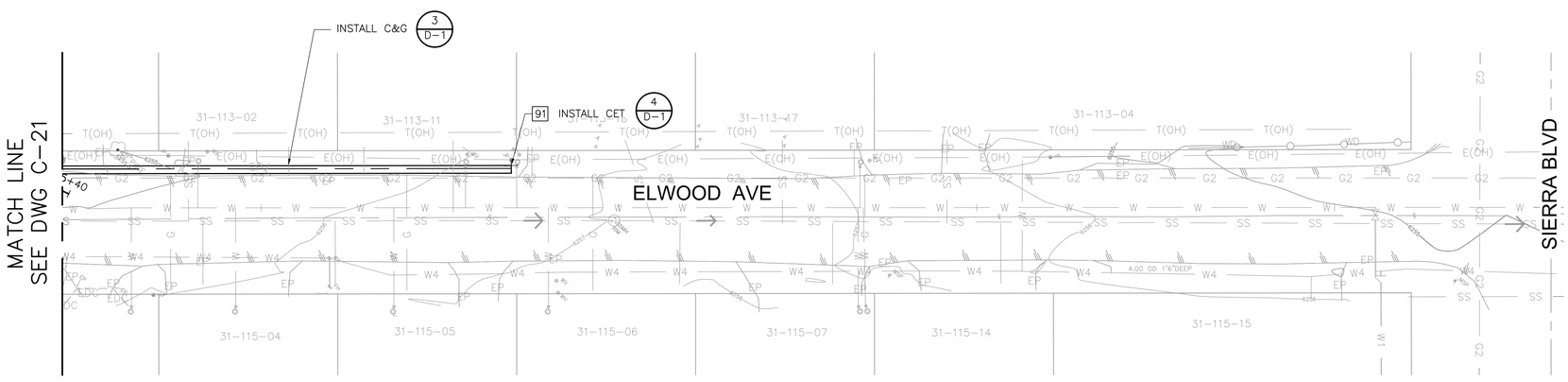

ELWOOD AVE

PLAN

1" = 20'
10 0 20

100% BID SET

REV	DATE	DESCRIPTION	BY

WARNING
0 1/2" 1"
IF THIS BAR SCALE DOES NOT MEASURE 1" THIS DWG HAS BEEN REDUCED SCALE ACCORDINGLY

CITY OF SOUTH LAKE TAHOE
DEPARTMENT OF PUBLIC WORKS
1052 TATA LANE
SOUTH LAKE TAHOE, CA 96150
Ph: (530) 542-6030 Fax: (530) 541-7524

REGISTERED PROFESSIONAL ENGINEER
No. C80207
Exp. 09/30/16
CIVIL
STATE OF CALIFORNIA

CDM Smith
12313 Soaring Way, Suite 2-D
Truckee, California 96161
Tel (530) 582-7235
Fax (530) 582-1098

DESIGNED BY: RHV
DRAWN BY: OMN
SHEET CHK'D BY: RHV
CROSS CHK'D BY: SLS
DATE: FEBRUARY 20, 2015

SIERRA TRACT PH 3 & 4 EROSION CONTROL PROJECT
SHEET TITLE
ELWOOD AVE PLAN

JOB NO. 27497-93981
SCALE: AS NOTED
SHEET 29 OF 57
DWG. NO:
C-22

© 2012 CDM SMITH ALL RIGHTS RESERVED.
REUSE OF DOCUMENTS: THESE DOCUMENTS AND DESIGNS PROVIDED BY PROFESSIONAL SERVICE, INCORPORATED HEREIN, ARE THE PROPERTY OF CDM SMITH AND ARE NOT TO BE USED, IN WHOLE OR PART, FOR ANY OTHER PROJECT WITHOUT THE WRITTEN AUTHORIZATION OF CDM SMITH.

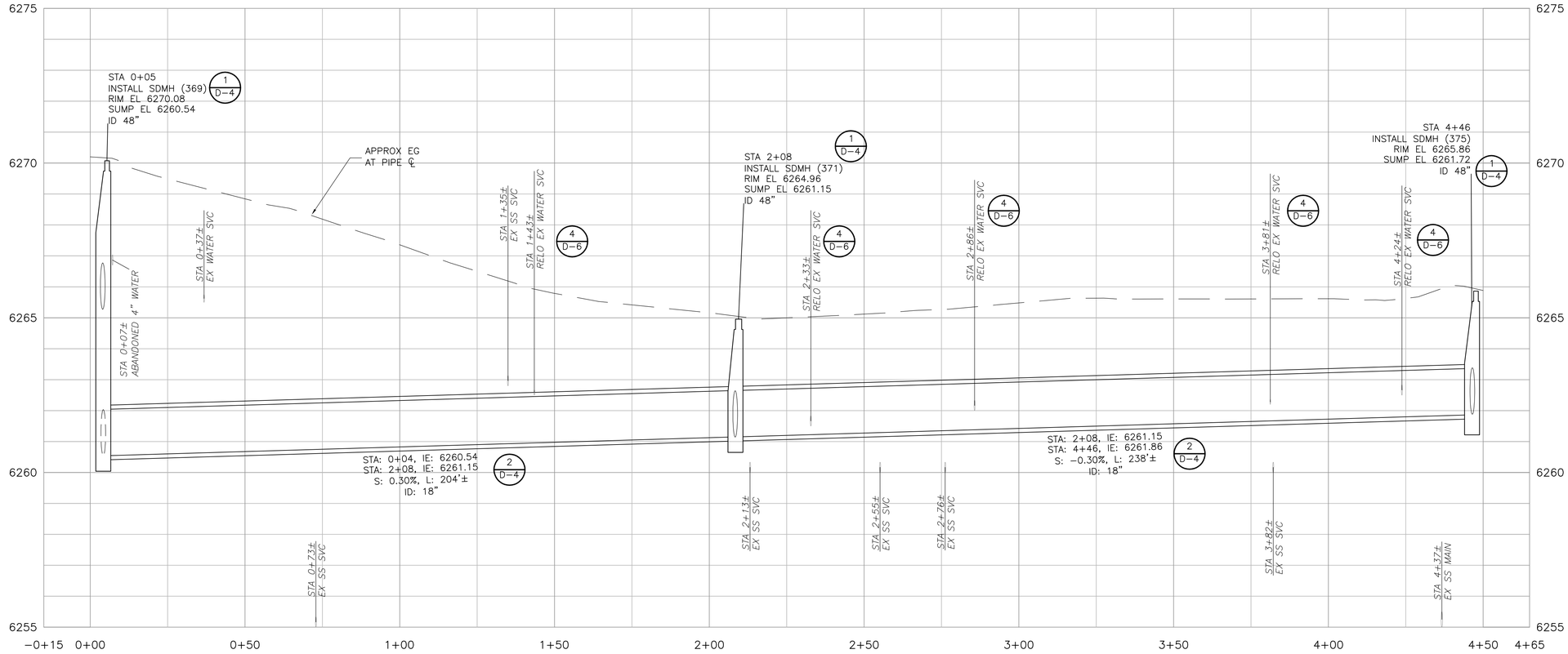

ARMSTRONG - (1)

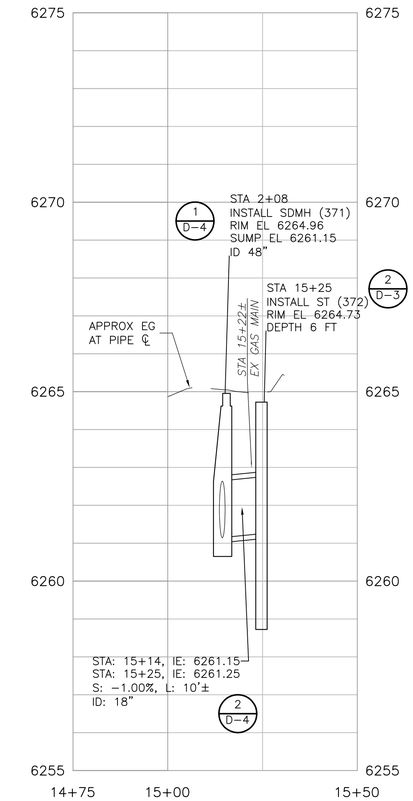

PROFILE SCALES
HORIZ: 1"=20' VERT: 1"=2'

ARMSTRONG - (6)

NOTES:

1. INSTALL CURB DRIVEWAY TRANSITIONS AT ALL DRIVEWAY CROSSINGS UNLESS OTHERWISE INDICATED ON THE PLANS. (5/D-1)
2. INSTALL CURB END TRANSITIONS AT TERMINATIONS OF ALL NEW CURB AND GUTTER SECTIONS. (4/D-1)
3. INSTALL CURB CORNER TRANSITIONS IN ALL LOCATIONS WHERE NEW CURB AND GUTTER CONTINUES AROUND STREET CORNERS. (7/D-1)
4. MATCH EXISTING TOP BACK OF CURB, MATCH FLOW LINE AND INSTALL COLD JOINT TIE-INS WHEN TRANSITIONING TO EXISTING CURB AND GUTTER OR DRIVEWAYS.
5. # SEE SHEETS G-4 & G-5 FOR DATA POINT TABLES.

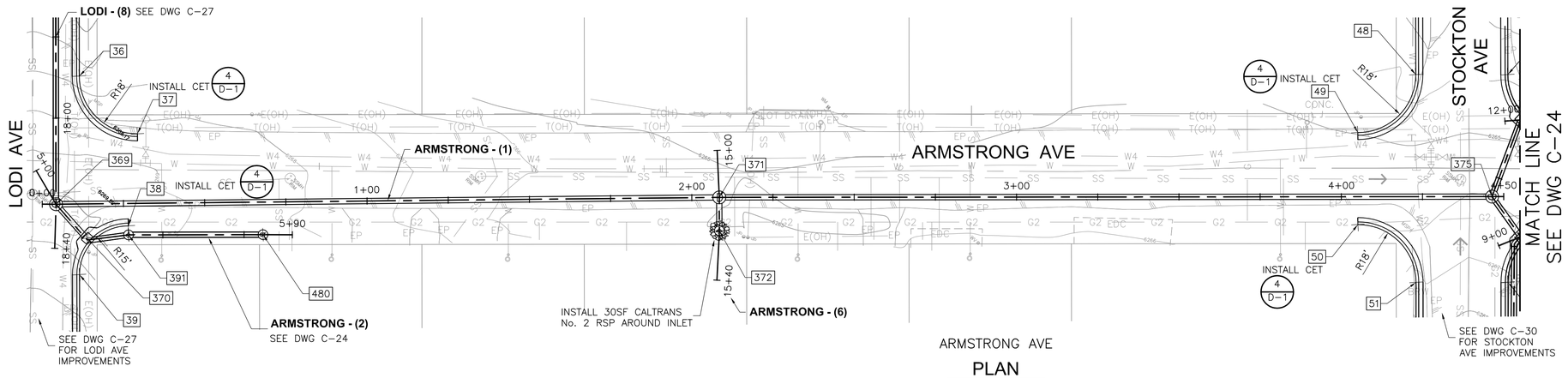

ARMSTRONG AVE

PLAN

1" = 20'

100% BID SET

REV	DATE	DESCRIPTION	BY

WARNING
0 1/2" 1"
IF THIS BAR SCALE DOES NOT MEASURE 1" THIS DWG HAS BEEN REDUCED SCALE ACCORDINGLY

CITY OF SOUTH LAKE TAHOE
DEPARTMENT OF PUBLIC WORKS
1052 TATA LANE
SOUTH LAKE TAHOE, CA 96150
Ph: (530) 542-6030 Fax: (530) 541-7524

REGISTERED PROFESSIONAL ENGINEER
RICHARD H. VADEN JR.
No. C80207
Exp. 09/30/16
CIVIL
STATE OF CALIFORNIA

CDM Smith
12313 Soaring Way, Suite 2-D
Truckee, California 96161
Tel (530) 582-7235
Fax (530) 582-1098

DESIGNED BY: RHV
DRAWN BY: OMN
SHEET CHK'D BY: RHV
CROSS CHK'D BY: SLS
DATE: FEBRUARY 20, 2015

SIERRA TRACT PH 3 & 4 EROSION CONTROL PROJECT
SHEET TITLE
ARMSTRONG AVE PLAN AND PROFILE

JOB NO. 27497-93981
SCALE: AS NOTED
SHEET 30 OF 57
DWG. NO: C-23

© 2012 CDM SMITH ALL RIGHTS RESERVED.
REUSE OF DOCUMENTS: THESE DOCUMENTS AND DESIGNS PROVIDED BY PROFESSIONAL SERVICE, INCORPORATED HEREIN, ARE THE PROPERTY OF CDM SMITH AND ARE NOT TO BE USED, IN WHOLE OR PART, FOR ANY OTHER PROJECT WITHOUT THE WRITTEN AUTHORIZATION OF CDM SMITH.

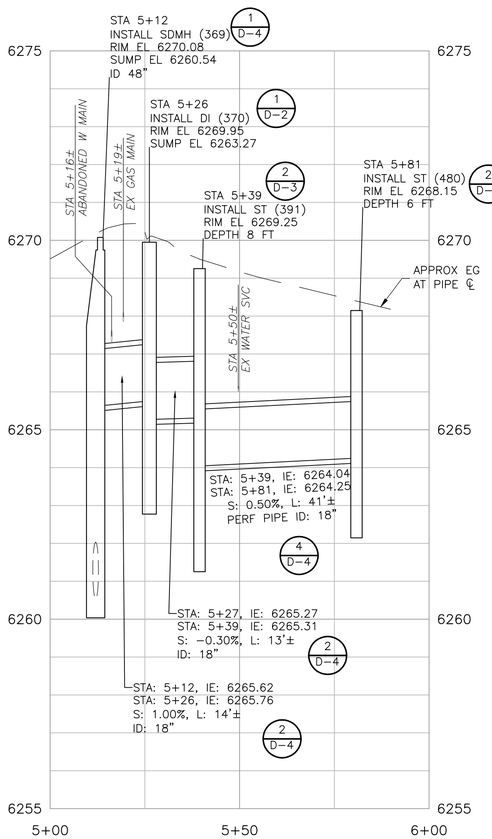

ARMSTRONG - (2)

SEE DWG C-23 FOR PLAN VIEW

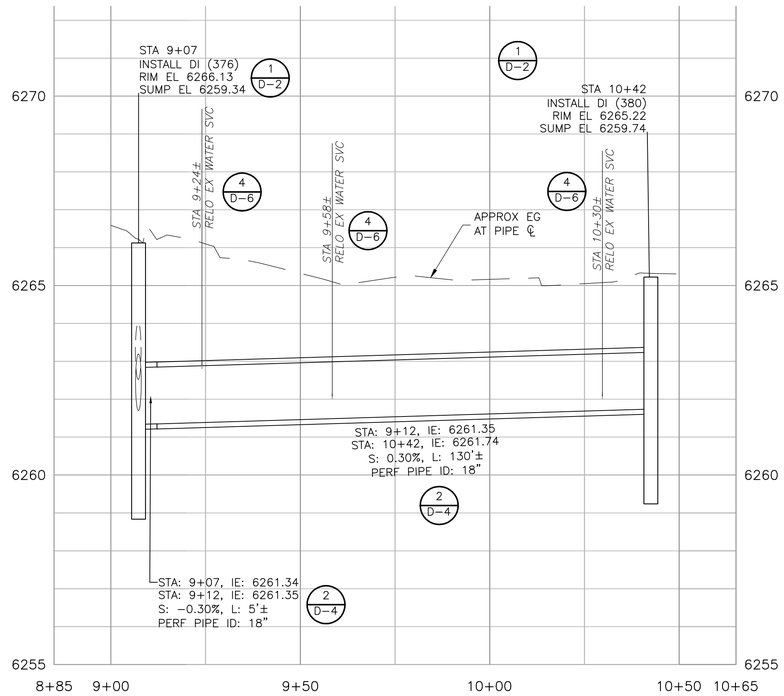

ARMSTRONG - (4)

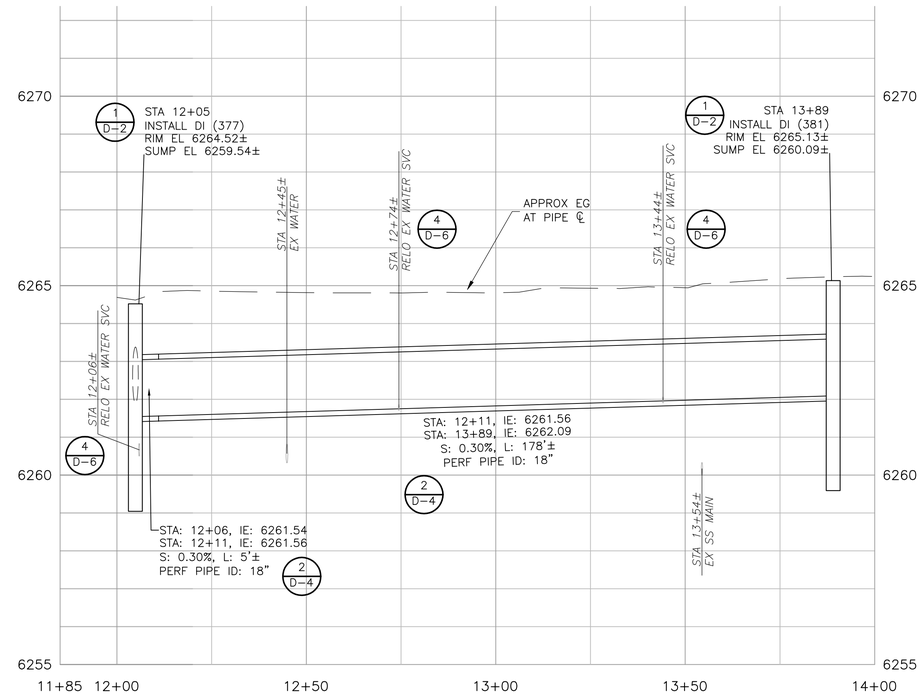

ARMSTRONG - (5)

PROFILE SCALES
HORIZ: 1"=20' VERT: 1"=2'

NOTES:

1. INSTALL CURB DRIVEWAY TRANSITIONS AT ALL DRIVEWAY CROSSINGS UNLESS OTHERWISE INDICATED ON THE PLANS. (5/D-1)
2. INSTALL CURB END TRANSITIONS AT TERMINATIONS OF ALL NEW CURB AND GUTTER SECTIONS. (4/D-1)
3. INSTALL CURB CORNER TRANSITIONS IN ALL LOCATIONS WHERE NEW CURB AND GUTTER CONTINUES AROUND STREET CORNERS. (7/D-1)
4. MATCH EXISTING TOP BACK OF CURB, MATCH FLOW LINE AND INSTALL COLD JOINT TIE-INS WHEN TRANSITIONING TO EXISTING CURB AND GUTTER OR DRIVEWAYS.
5. [#] SEE SHEETS G-4 & G-5 FOR DATA POINT TABLES.

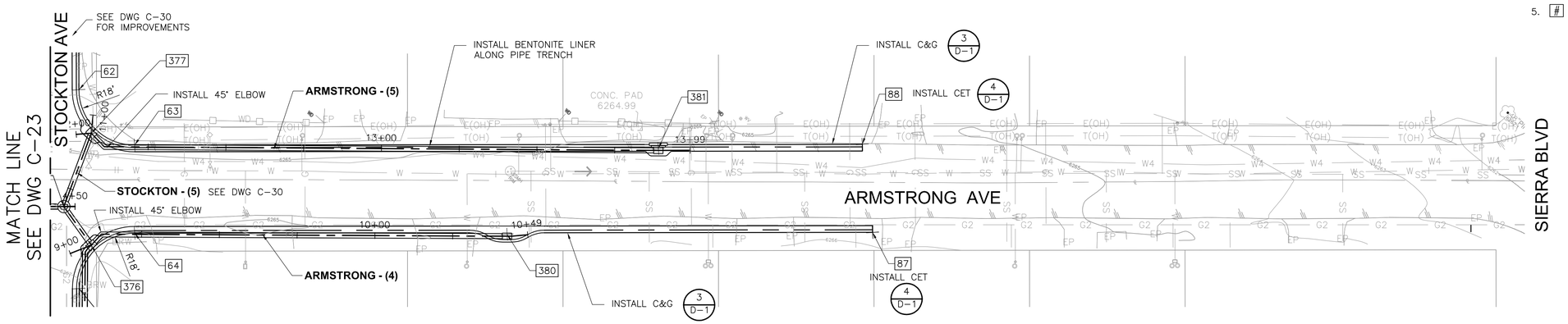

ARMSTRONG AVE

PLAN

1" = 20'
10 0 20

100% BID SET

REV	DATE	DESCRIPTION	BY

WARNING
0 1/2" 1"
IF THIS BAR SCALE DOES NOT MEASURE 1" THIS DWG HAS BEEN REDUCED SCALE ACCORDINGLY

CITY OF SOUTH LAKE TAHOE
DEPARTMENT OF PUBLIC WORKS
1052 TATA LANE
SOUTH LAKE TAHOE, CA 96150
Ph: (530) 542-6030 Fax: (530) 541-7524

REGISTERED PROFESSIONAL ENGINEER No. C80207 Exp. 09/30/16 CIVIL STATE OF CALIFORNIA

CDM Smith
12313 Soaring Way, Suite 2-D
Truckee, California 96161
Tel (530) 582-7235
Fax (530) 582-1098

DESIGNED BY: RHV
DRAWN BY: OMN
SHEET CHK'D BY: RHV
CROSS CHK'D BY: SLS
DATE: FEBRUARY 20, 2015

SIERRA TRACT PH 3 & 4 EROSION CONTROL PROJECT

SHEET TITLE
ARMSTRONG AVE PLAN AND PROFILE

JOB NO. 27497-93981
SCALE: AS NOTED
SHEET 31 OF 57
DWG. NO:
C-24

© 2012 CDM SMITH ALL RIGHTS RESERVED.
REUSE OF DOCUMENTS: THESE DOCUMENTS AND DESIGNS PROVIDED BY PROFESSIONAL SERVICE, INCORPORATED HEREIN, ARE THE PROPERTY OF CDM SMITH AND ARE NOT TO BE USED, IN WHOLE OR PART, FOR ANY OTHER PROJECT WITHOUT THE WRITTEN AUTHORIZATION OF CDM SMITH.

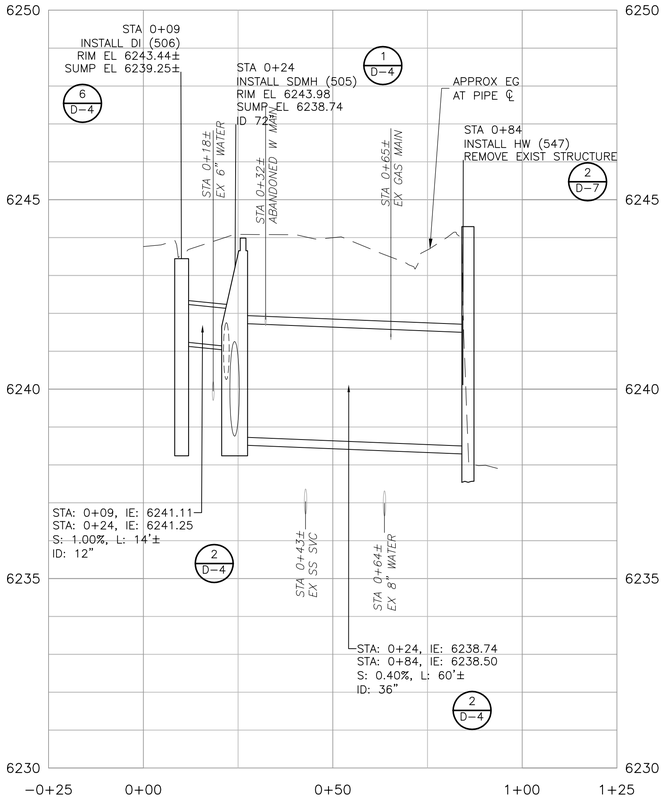

LODI - (1)

SEE DWG C-26 FOR PLAN

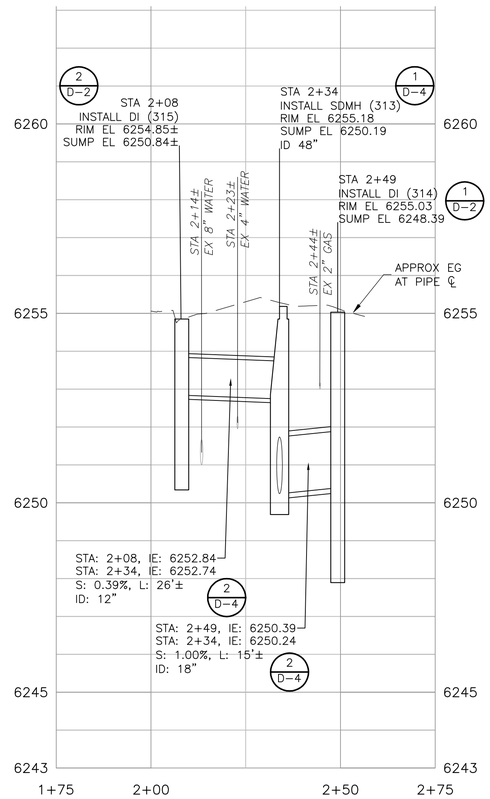

LODI - (2)

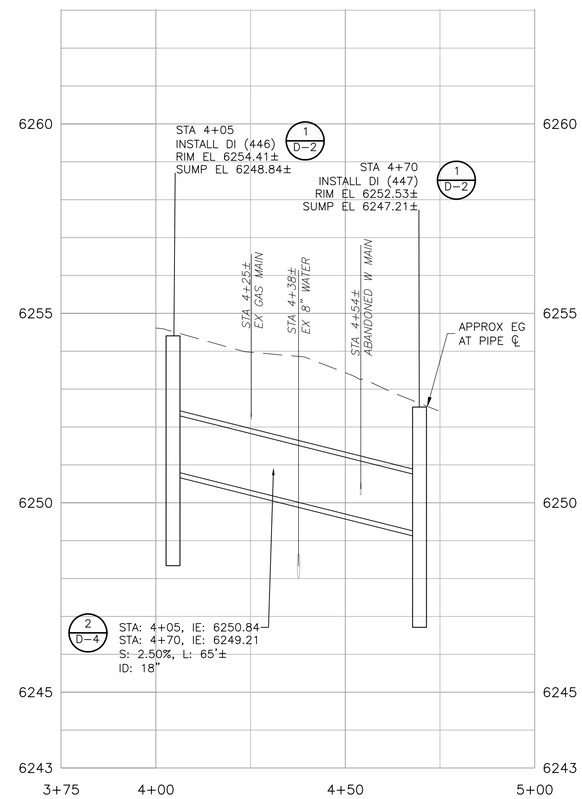

LODI - (3)

PROFILE SCALES
HORIZ: 1"=20'
VERT: 1"=2'

NOTES:

1. INSTALL CURB DRIVEWAY TRANSITIONS AT ALL DRIVEWAY CROSSINGS UNLESS OTHERWISE INDICATED ON THE PLANS. (5/D-1)
2. INSTALL CURB END TRANSITIONS AT TERMINATIONS OF ALL NEW CURB AND GUTTER SECTIONS. (4/D-1)
3. INSTALL CURB CORNER TRANSITIONS IN ALL LOCATIONS WHERE NEW CURB AND GUTTER CONTINUES AROUND STREET CORNERS. (7/D-1)
4. MATCH EXISTING TOP BACK OF CURB, MATCH FLOW LINE AND INSTALL COLD JOINT TIE-INS WHEN TRANSITIONING TO EXISTING CURB AND GUTTER OR DRIVEWAYS.
5. # SEE SHEETS G-4 & G-5 FOR DATA POINT TABLES.

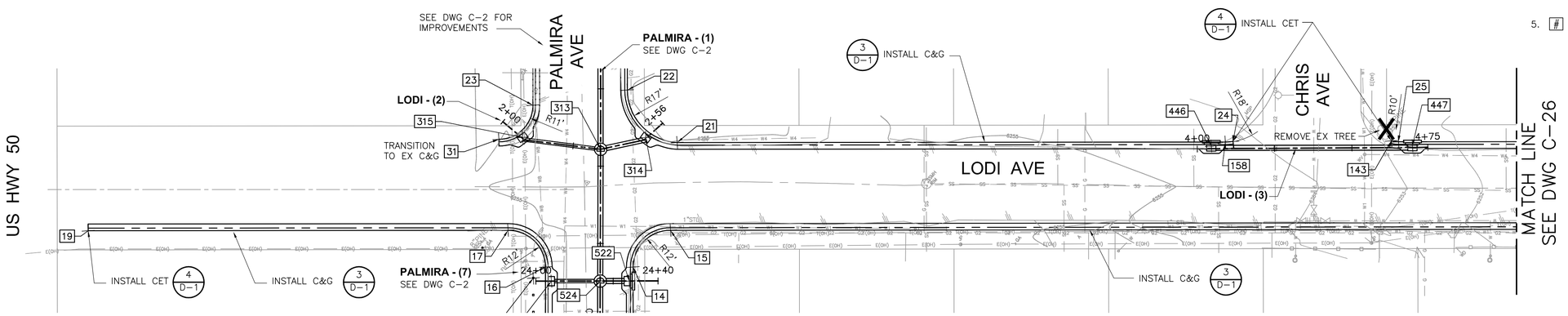

LODI AVE

PLAN

1" = 20'

100% BID SET

REV	DATE	DESCRIPTION	BY

WARNING
0 1/2" 1"
IF THIS BAR SCALE DOES NOT MEASURE 1" THIS DWG HAS BEEN REDUCED SCALE ACCORDINGLY

CITY OF SOUTH LAKE TAHOE
DEPARTMENT OF PUBLIC WORKS
1052 TATA LANE
SOUTH LAKE TAHOE, CA 96150
Ph: (530) 542-6030 Fax: (530) 541-7524

REGISTERED PROFESSIONAL ENGINEER No. C80207 Exp. 09/30/16 CIVIL STATE OF CALIFORNIA

CDM Smith
12313 Soaring Way, Suite 2-D
Truckee, California 96161
Tel (530) 582-7235
Fax (530) 582-1098

DESIGNED BY: RHV
DRAWN BY: OMN
SHEET CHK'D BY: RHV
CROSS CHK'D BY: SLS
DATE: FEBRUARY 20, 2015

SIERRA TRACT PH 3 & 4 EROSION CONTROL PROJECT
SHEET TITLE
LODI AVE PLAN AND PROFILE

JOB NO. 27497-93981
SCALE: AS NOTED
SHEET 32 OF 57
DWG. NO:
C-25

© 2012 CDM SMITH ALL RIGHTS RESERVED.
REUSE OF DOCUMENTS: THESE DOCUMENTS AND DESIGNS PROVIDED BY PROFESSIONAL SERVICE, INCORPORATED HEREIN, ARE THE PROPERTY OF CDM SMITH AND ARE NOT TO BE USED, IN WHOLE OR PART, FOR ANY OTHER PROJECT WITHOUT THE WRITTEN AUTHORIZATION OF CDM SMITH.

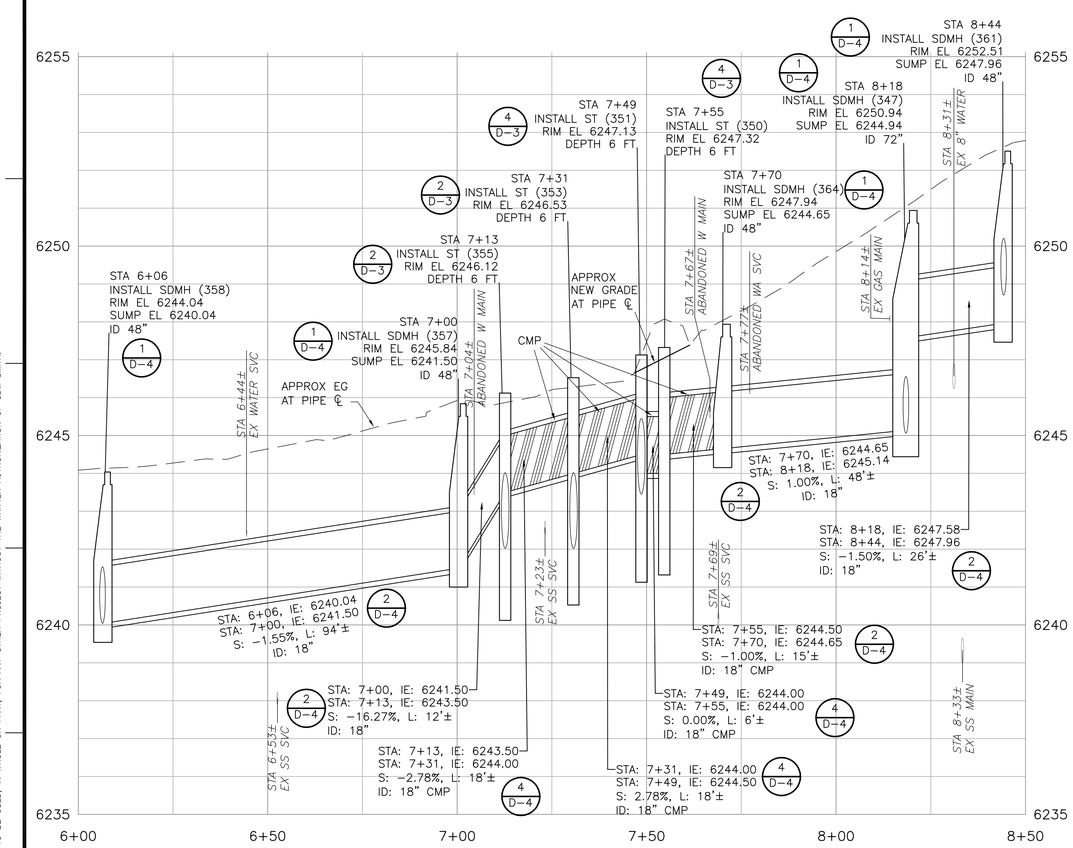

LODI - (4)

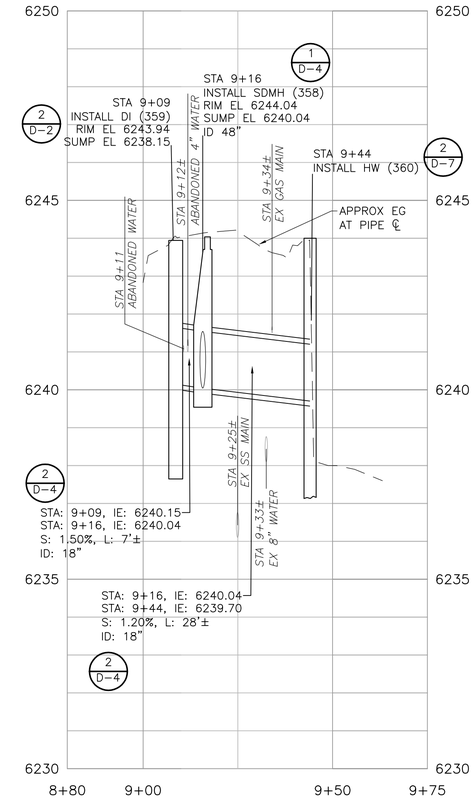

LODI - (5)

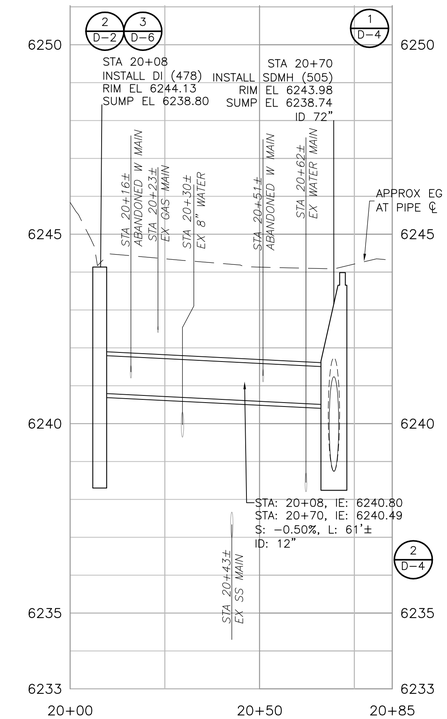

LODI - (9)

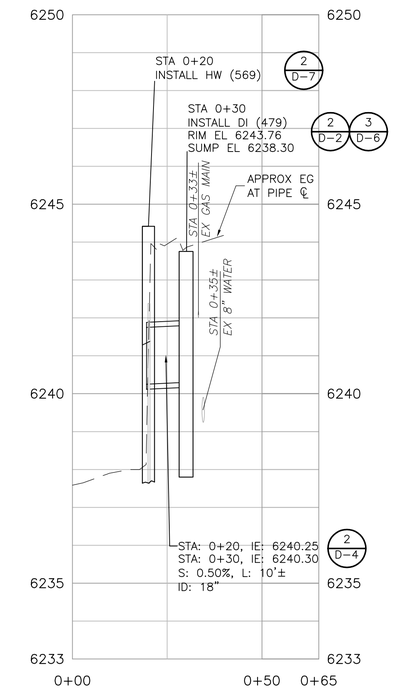

LODI - (10)

PROFILE SCALES
HORIZ: 1"=20'
VERT: 1"=2'

NOTES:

1. INSTALL CURB DRIVEWAY TRANSITIONS AT ALL DRIVEWAY CROSSINGS UNLESS OTHERWISE INDICATED ON THE PLANS. (5/D-1)
2. INSTALL CURB END TRANSITIONS AT TERMINATIONS OF ALL NEW CURB AND GUTTER SECTIONS. (4/D-1)
3. INSTALL CURB CORNER TRANSITIONS IN ALL LOCATIONS WHERE NEW CURB AND GUTTER CONTINUES AROUND STREET CORNERS. (7/D-1)
4. MATCH EXISTING TOP BACK OF CURB, MATCH FLOW LINE AND INSTALL COLD JOINT TIE-INS WHEN TRANSITIONING TO EXISTING CURB AND GUTTER OR DRIVEWAYS.
5. # SEE SHEETS G-4 & G-5 FOR DATA POINT TABLES.

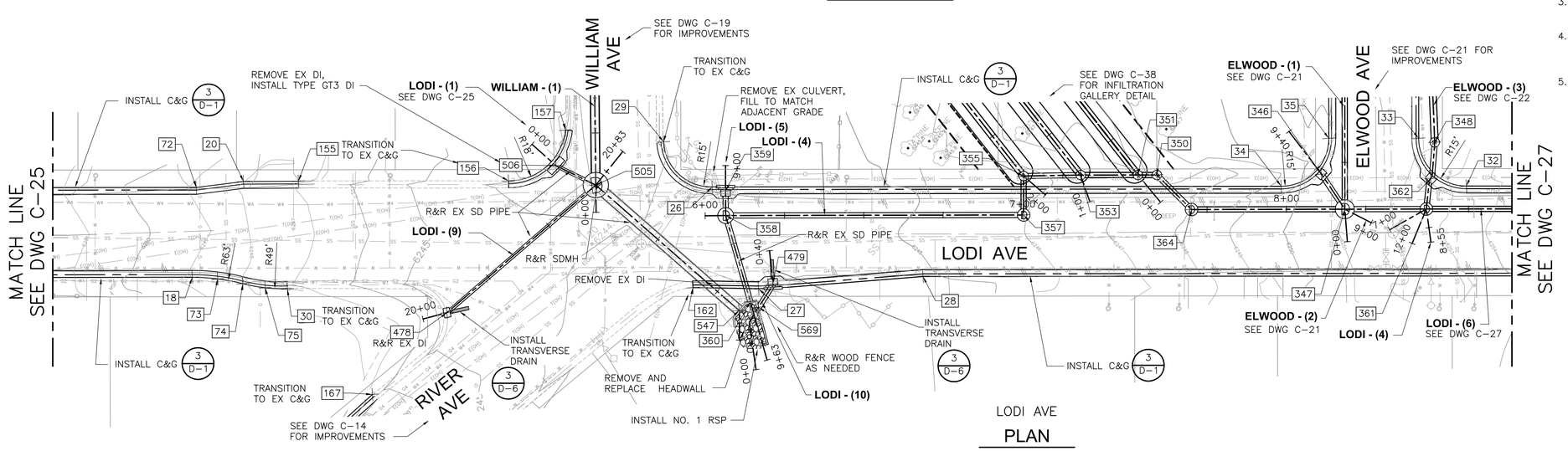

LODI AVE
PLAN

1" = 20'

100% BID SET

REV	DATE	DESCRIPTION	BY

WARNING
0 1/2" 1"
IF THIS BAR SCALE DOES NOT MEASURE 1" THIS DWG HAS BEEN REDUCED SCALE ACCORDINGLY

CITY OF SOUTH LAKE TAHOE
DEPARTMENT OF PUBLIC WORKS
1052 TATA LANE
SOUTH LAKE TAHOE, CA 96150
Ph: (530) 542-6030 Fax: (530) 541-7524

REGISTERED PROFESSIONAL ENGINEER No. C80207 Exp. 09/30/16 CIVIL STATE OF CALIFORNIA

CDM Smith
12313 Soaring Way, Suite 2-D
Truckee, California 96161
Tel (530) 582-7235
Fax (530) 582-1098

DESIGNED BY: RHV
DRAWN BY: OMN
SHEET CHK'D BY: RHV
CROSS CHK'D BY: SLS
DATE: FEBRUARY 20, 2015

SIERRA TRACT PH 3 & 4 EROSION CONTROL PROJECT
SHEET TITLE
LODI AVE PLAN AND PROFILE

JOB NO. 27497-93981
SCALE: AS NOTED
SHEET 33 OF 57
DWG. NO: C-26

© 2012 CDM SMITH ALL RIGHTS RESERVED.
REUSE OF DOCUMENTS: THESE DOCUMENTS AND DESIGNS PROVIDED BY PROFESSIONAL SERVICE, INCORPORATED HEREIN, ARE THE PROPERTY OF CDM SMITH AND ARE NOT TO BE USED, IN WHOLE OR PART, FOR ANY OTHER PROJECT WITHOUT THE WRITTEN AUTHORIZATION OF CDM SMITH.

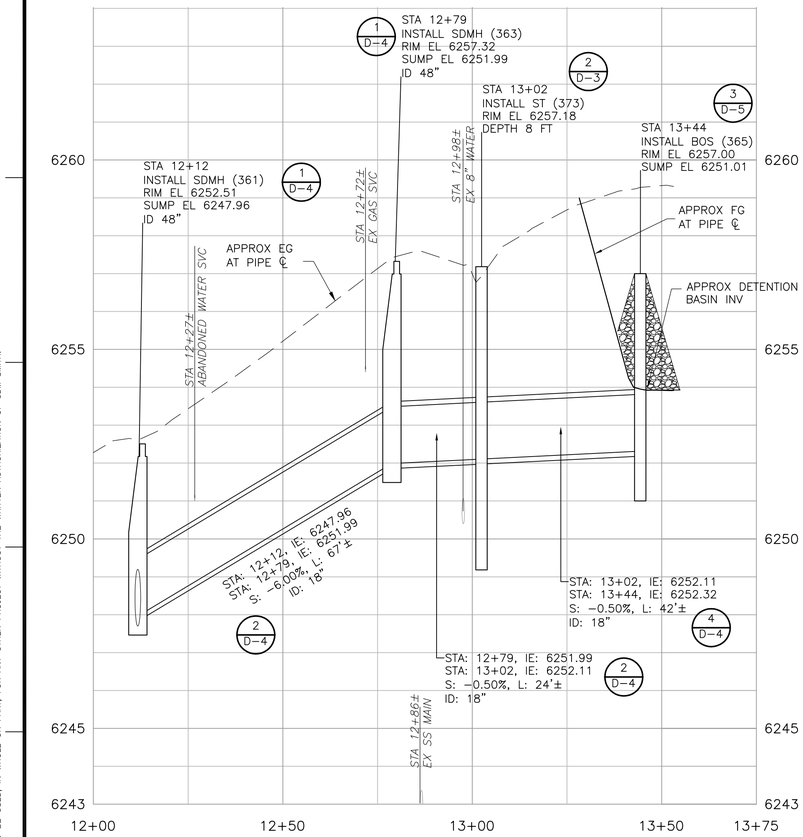

LODI - (6)

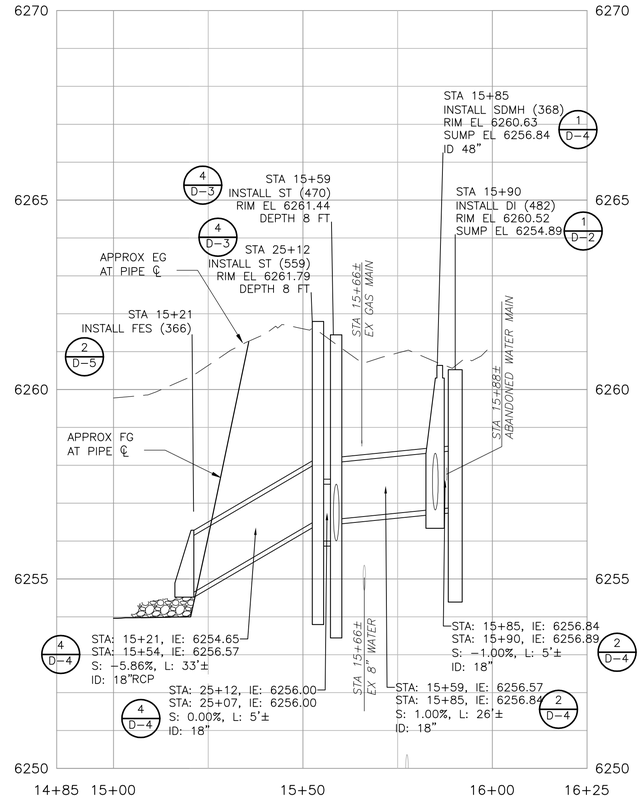

LODI - (7)

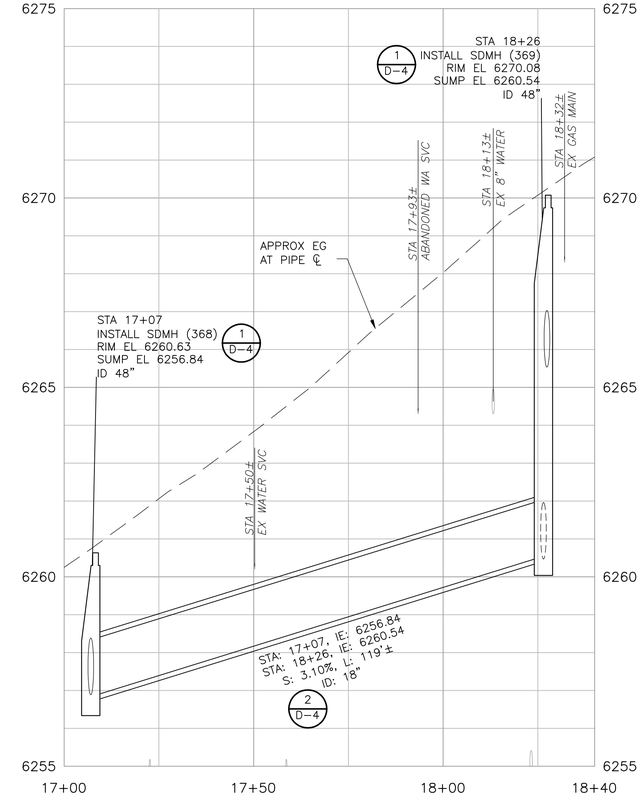

LODI - (8)

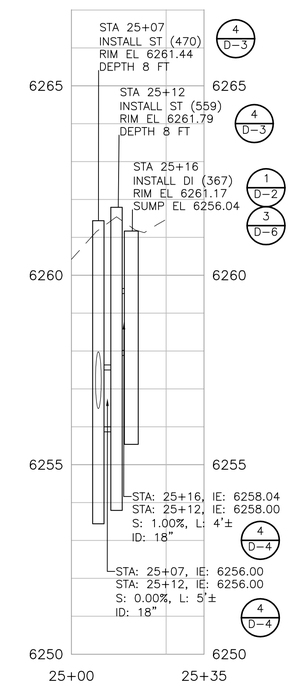

LODI - (11)

PROFILE SCALES
HORIZ: 1"=20'
VERT: 1"=2'

NOTES:

1. INSTALL CURB DRIVEWAY TRANSITIONS AT ALL DRIVEWAY CROSSINGS UNLESS OTHERWISE INDICATED ON THE PLANS. (5/D-1)
2. INSTALL CURB END TRANSITIONS AT TERMINATIONS OF ALL NEW CURB AND GUTTER SECTIONS. (4/D-1)
3. INSTALL CURB CORNER TRANSITIONS IN ALL LOCATIONS WHERE NEW CURB AND GUTTER CONTINUES AROUND STREET CORNERS. (7/D-1)
4. MATCH EXISTING TOP BACK OF CURB, MATCH FLOW LINE AND INSTALL COLD JOINT TIE-INS WHEN TRANSITIONING TO EXISTING CURB AND GUTTER OR DRIVEWAYS.
5. # SEE SHEETS G-4 & G-5 FOR DATA POINT TABLES.

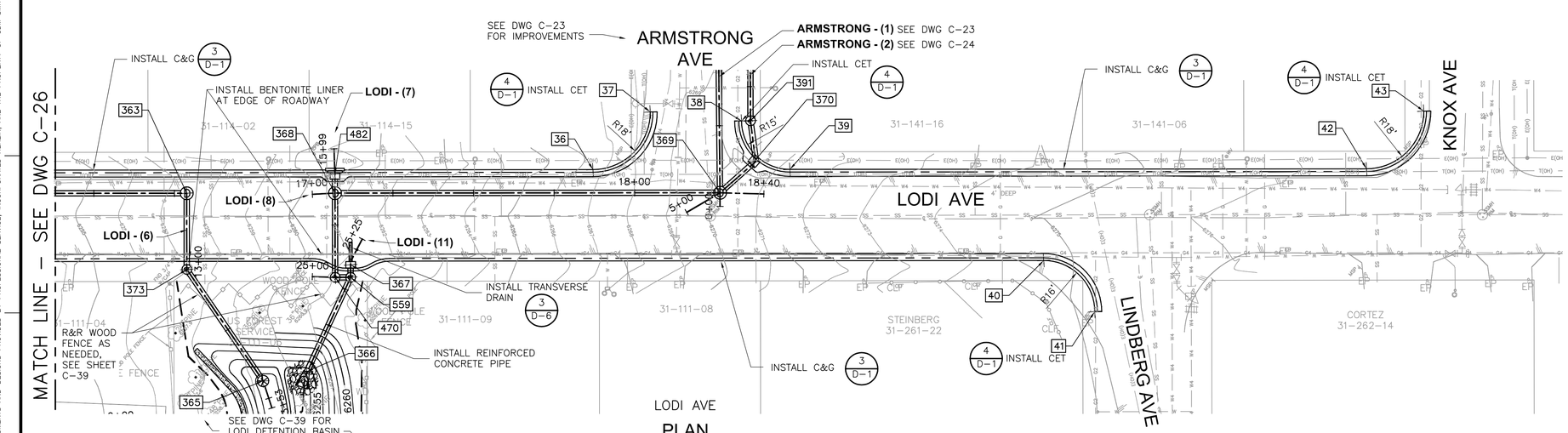

LODI AVE
PLAN

1" = 20'
10 0 20

100% BID SET

REV	DATE	DESCRIPTION	BY

WARNING
0 1/2" 1"
IF THIS BAR SCALE DOES NOT MEASURE 1" THIS DWG HAS BEEN REDUCED SCALE ACCORDINGLY

CITY OF SOUTH LAKE TAHOE
DEPARTMENT OF PUBLIC WORKS
1052 TATA LANE
SOUTH LAKE TAHOE, CA 96150
Ph: (530) 542-6030 Fax: (530) 541-7524

REGISTERED PROFESSIONAL ENGINEER No. C80207 Exp. 09/30/16 CIVIL STATE OF CALIFORNIA

CDM Smith
12313 Soaring Way, Suite 2-D
Truckee, California 96161
Tel (530) 582-7235
Fax (530) 582-1098

DESIGNED BY: RHV
DRAWN BY: OMN
SHEET CHK'D BY: RHV
CROSS CHK'D BY: SLS
DATE: FEBRUARY 20, 2015

SIERRA TRACT PH 3 & 4 EROSION CONTROL PROJECT
SHEET TITLE
LODI AVE PLAN AND PROFILE

JOB NO. 27497-93981
SCALE: AS NOTED
SHEET 34 OF 57
DWG. NO: C-27

© 2012 CDM SMITH ALL RIGHTS RESERVED.
REUSE OF DOCUMENTS: THESE DOCUMENTS AND DESIGNS PROVIDED BY PROFESSIONAL SERVICE, INCORPORATED HEREIN, ARE THE PROPERTY OF CDM SMITH AND ARE NOT TO BE USED, IN WHOLE OR PART, FOR ANY OTHER PROJECT WITHOUT THE WRITTEN AUTHORIZATION OF CDM SMITH.

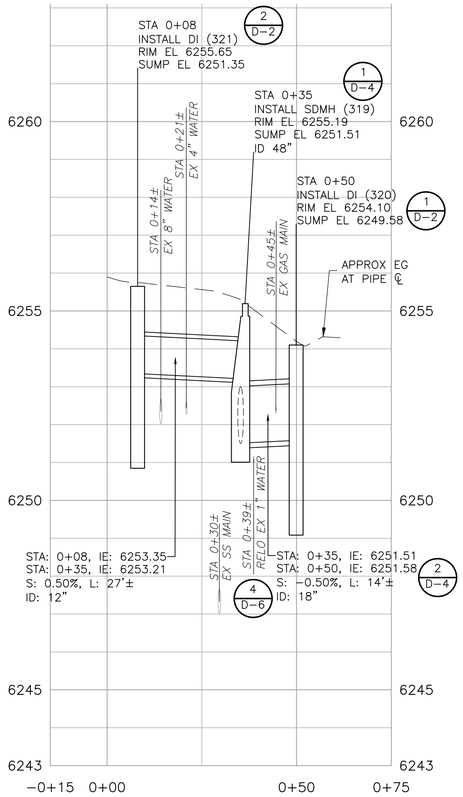

STOCKTON - (1)

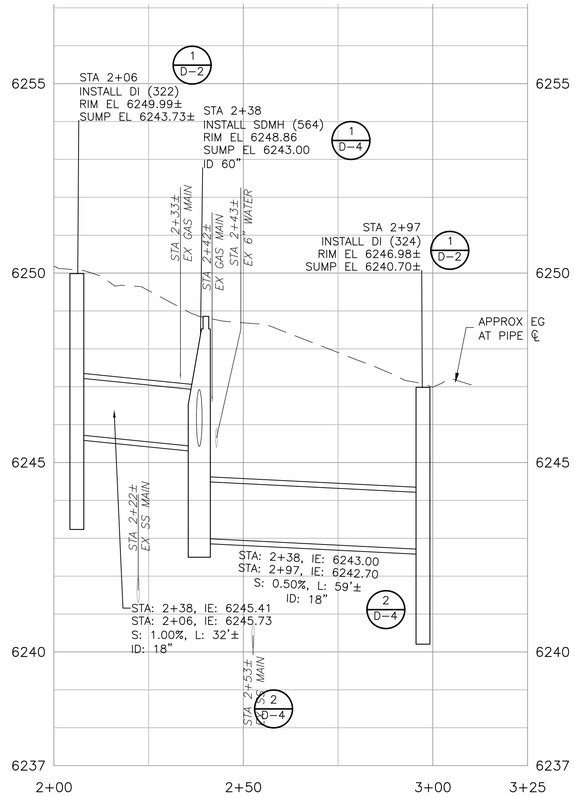

STOCKTON - (2)

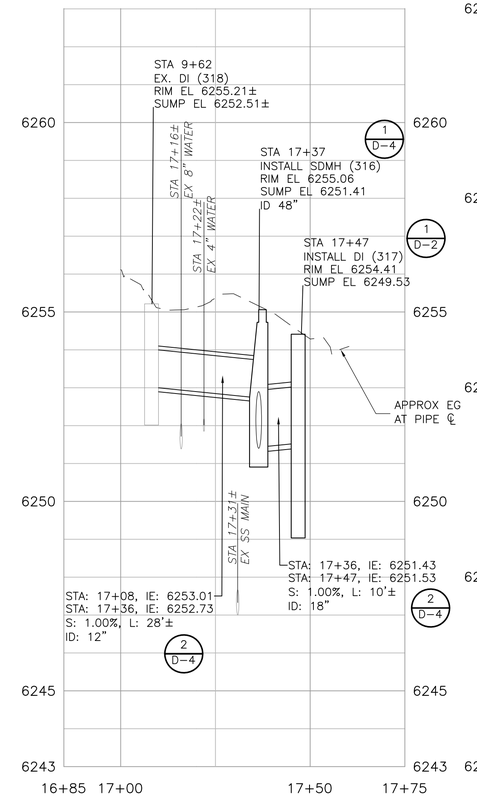

STOCKTON - (7)

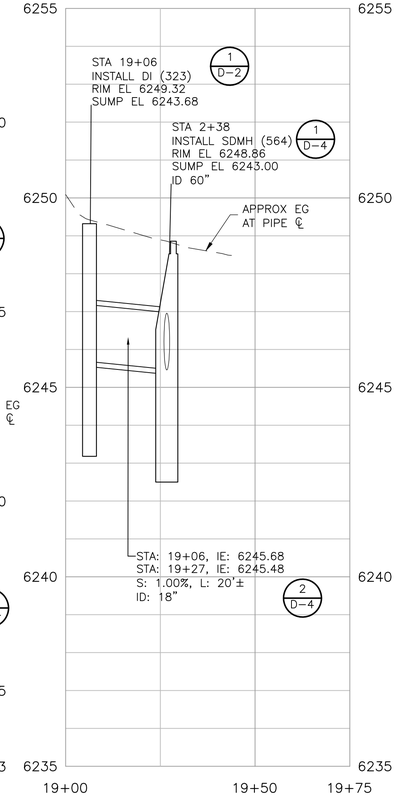

STOCKTON - (9)

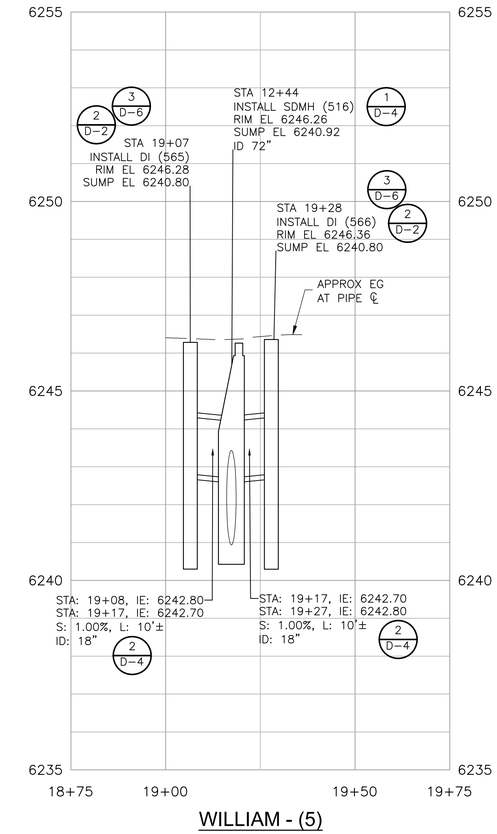

WILLIAM - (5)

PROFILE SCALES
HORIZ: 1"=20'
VERT: 1"=2'

NOTES:

1. INSTALL CURB DRIVEWAY TRANSITIONS AT ALL DRIVEWAY CROSSINGS UNLESS OTHERWISE INDICATED ON THE PLANS. (5/D-1)
2. INSTALL CURB END TRANSITIONS AT TERMINATIONS OF ALL NEW CURB AND GUTTER SECTIONS. (4/D-1)
3. INSTALL CURB CORNER TRANSITIONS IN ALL LOCATIONS WHERE NEW CURB AND GUTTER CONTINUES AROUND STREET CORNERS. (7/D-1)
4. MATCH EXISTING TOP BACK OF CURB, MATCH FLOW LINE AND INSTALL COLD JOINT TIE-INS WHEN TRANSITIONING TO EXISTING CURB AND GUTTER OR DRIVEWAYS.
5. # SEE SHEETS G-4 & G-5 FOR DATA POINT TABLES.

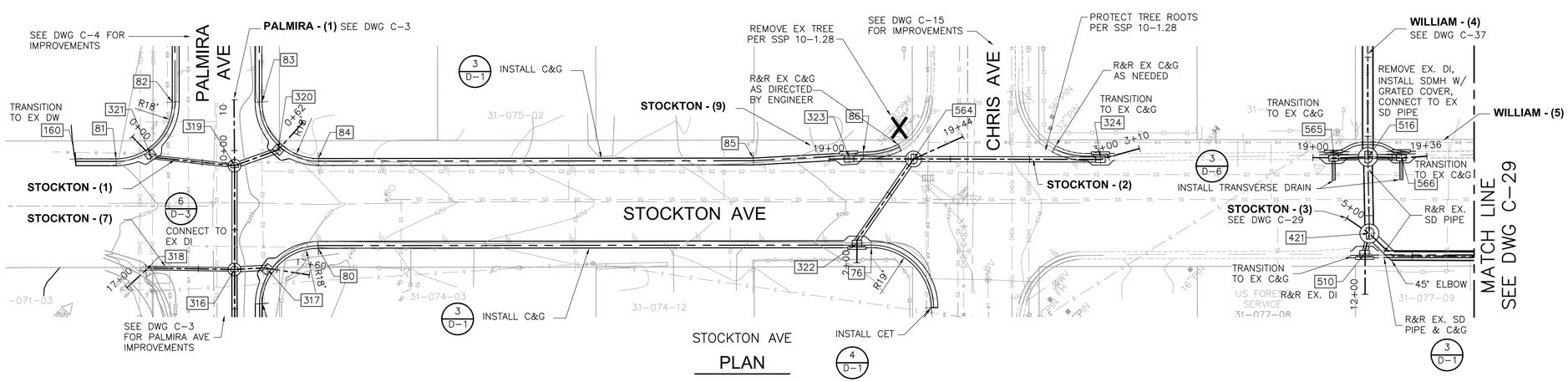

STOCKTON AVE
PLAN

1" = 20'

100% BID SET

REV	DATE	DESCRIPTION	BY

WARNING
0 1/2" 1"
IF THIS BAR SCALE DOES NOT MEASURE 1" THIS DWG HAS BEEN REDUCED SCALE ACCORDINGLY

CITY OF SOUTH LAKE TAHOE
DEPARTMENT OF PUBLIC WORKS
1052 TATA LANE
SOUTH LAKE TAHOE, CA 96150
Ph: (530) 542-6030 Fax: (530) 541-7524

REGISTERED PROFESSIONAL ENGINEER No. C80207 Exp. 09/30/16 CIVIL STATE OF CALIFORNIA

CDM Smith
12313 Soaring Way, Suite 2-D
Truckee, California 96161
Tel (530) 582-7235
Fax (530) 582-1098

DESIGNED BY: RHV
DRAWN BY: OMN
SHEET CHK'D BY: RHV
CROSS CHK'D BY: SLS
DATE: MAY 8, 2015

SIERRA TRACT PH 3 & 4 EROSION CONTROL PROJECT
SHEET TITLE
STOCKTON AVE PLAN AND PROFILE

JOB NO. 27497-93981
SCALE: AS NOTED
SHEET 35 OF 57
DWG. NO: C-28

© 2012 CDM SMITH ALL RIGHTS RESERVED.
REUSE OF DOCUMENTS: THESE DOCUMENTS AND DESIGNS PROVIDED BY PROFESSIONAL SERVICE, INCORPORATED HEREIN, ARE THE PROPERTY OF CDM SMITH AND ARE NOT TO BE USED, IN WHOLE OR PART, FOR ANY OTHER PROJECT WITHOUT THE WRITTEN AUTHORIZATION OF CDM SMITH.

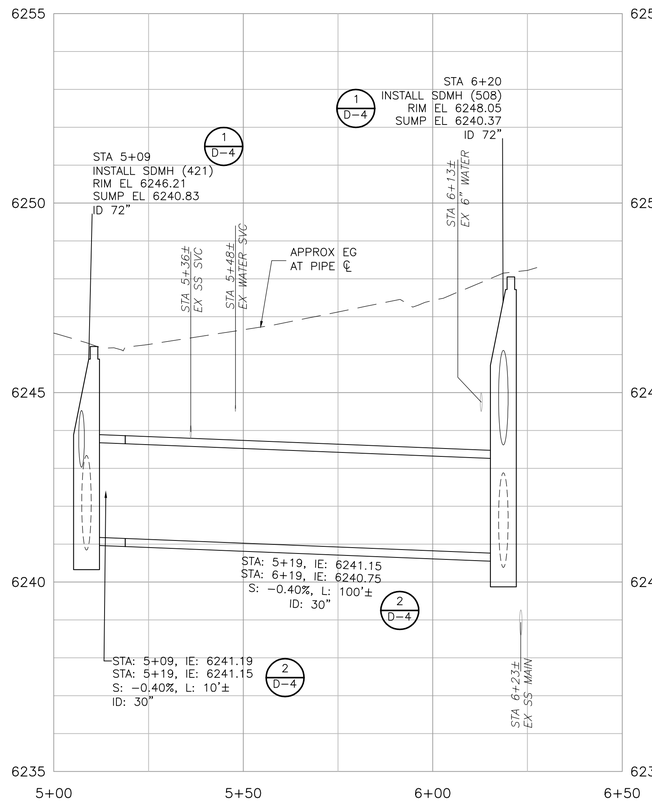

STOCKTON - (3)

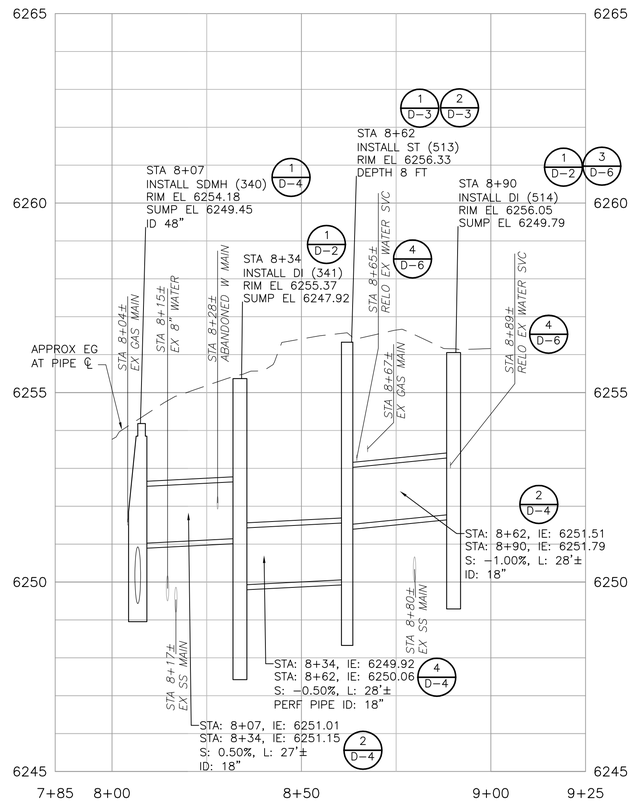

STOCKTON - (4)

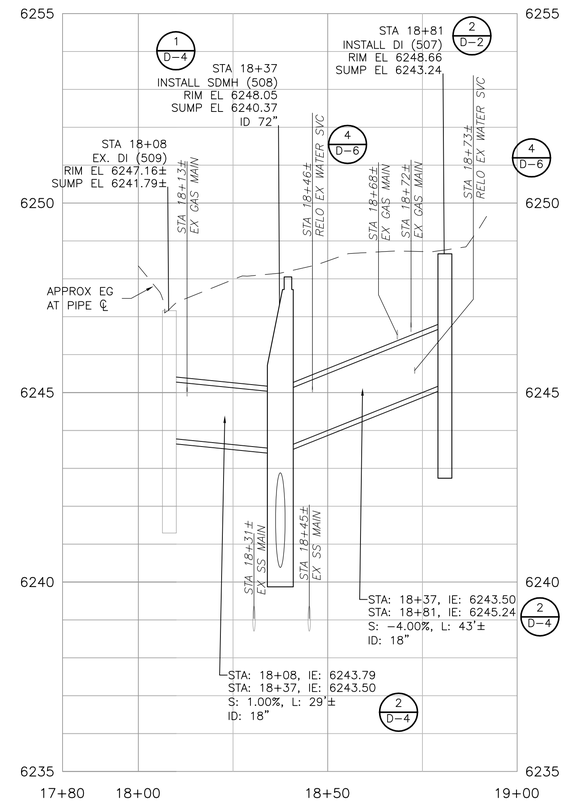

STOCKTON - (8)

PROFILE SCALES
HORIZ: 1"=20'
VERT: 1"=2'

NOTES:

1. INSTALL CURB DRIVEWAY TRANSITIONS AT ALL DRIVEWAY CROSSINGS UNLESS OTHERWISE INDICATED ON THE PLANS. (5/D-1)
2. INSTALL CURB END TRANSITIONS AT TERMINATIONS OF ALL NEW CURB AND GUTTER SECTIONS. (4/D-1)
3. INSTALL CURB CORNER TRANSITIONS IN ALL LOCATIONS WHERE NEW CURB AND GUTTER CONTINUES AROUND STREET CORNERS. (7/D-1)
4. MATCH EXISTING TOP BACK OF CURB, MATCH FLOW LINE AND INSTALL COLD JOINT TIE-INS WHEN TRANSITIONING TO EXISTING CURB AND GUTTER OR DRIVEWAYS.
5. # SEE SHEETS G-4 & G-5 FOR DATA POINT TABLES.

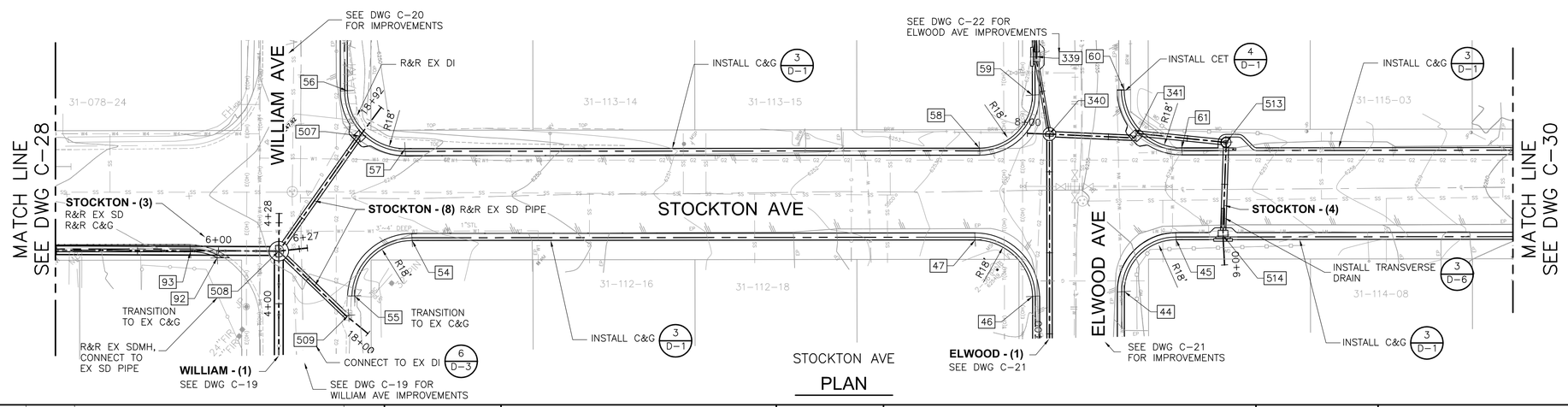

STOCKTON AVE

PLAN

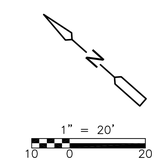

100% BID SET

REV	DATE	DESCRIPTION	BY

WARNING
0 1/2" 1"
IF THIS BAR SCALE DOES NOT MEASURE 1" THIS DWG HAS BEEN REDUCED SCALE ACCORDINGLY

CITY OF SOUTH LAKE TAHOE
DEPARTMENT OF PUBLIC WORKS
1052 TATA LANE
SOUTH LAKE TAHOE, CA 96150
Ph: (530) 542-6030 Fax: (530) 541-7524

REGISTERED PROFESSIONAL ENGINEER No. C80207 Exp. 09/30/16 CIVIL STATE OF CALIFORNIA

CDM Smith
12313 Soaring Way, Suite 2-D
Truckee, California 96161
Tel (530) 582-7235
Fax (530) 582-1098

DESIGNED BY: RHV
DRAWN BY: OMN
SHEET CHK'D BY: RHV
CROSS CHK'D BY: SLS
DATE: FEBRUARY 20, 2015

SIERRA TRACT PH 3 & 4 EROSION CONTROL PROJECT
SHEET TITLE
STOCKTON AVE PLAN AND PROFILE

JOB NO. 27497-93981
SCALE: AS NOTED
SHEET 36 OF 57
DWG. NO: C-29

© 2012 CDM SMITH ALL RIGHTS RESERVED.
REUSE OF DOCUMENTS: THESE DOCUMENTS AND DESIGNS PROVIDED BY PROFESSIONAL SERVICE, INCORPORATED HEREIN, ARE THE PROPERTY OF CDM SMITH AND ARE NOT TO BE USED, IN WHOLE OR PART, FOR ANY OTHER PROJECT WITHOUT THE WRITTEN AUTHORIZATION OF CDM SMITH.

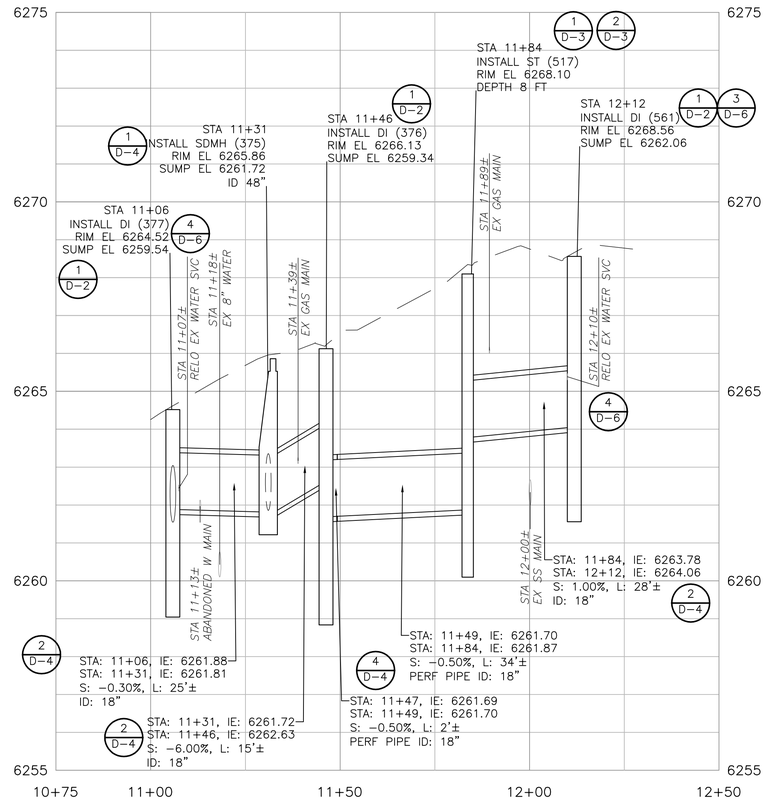

STOCKTON - (5)

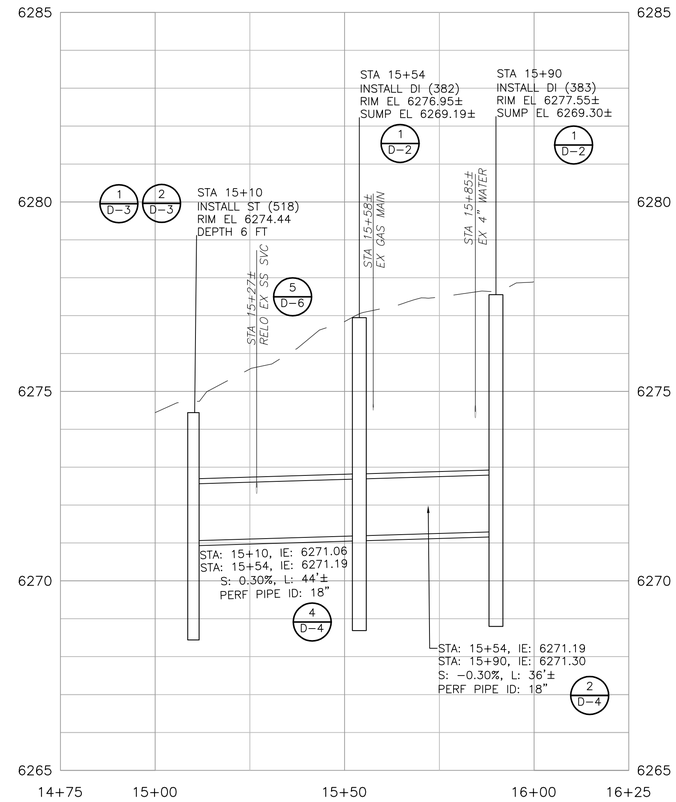

STOCKTON - (6)

PROFILE SCALES
HORIZ: 1"=20'
VERT: 1"=2'

NOTES:

1. INSTALL CURB DRIVEWAY TRANSITIONS AT ALL DRIVEWAY CROSSINGS UNLESS OTHERWISE INDICATED ON THE PLANS. (5/D-1)
2. INSTALL CURB END TRANSITIONS AT TERMINATIONS OF ALL NEW CURB AND GUTTER SECTIONS. (4/D-1)
3. INSTALL CURB CORNER TRANSITIONS IN ALL LOCATIONS WHERE NEW CURB AND GUTTER CONTINUES AROUND STREET CORNERS. (7/D-1)
4. MATCH EXISTING TOP BACK OF CURB, MATCH FLOW LINE AND INSTALL COLD JOINT TIE-INS WHEN TRANSITIONING TO EXISTING CURB AND GUTTER OR DRIVEWAYS.
5. # SEE SHEETS G-4 & G-5 FOR DATA POINT TABLES.

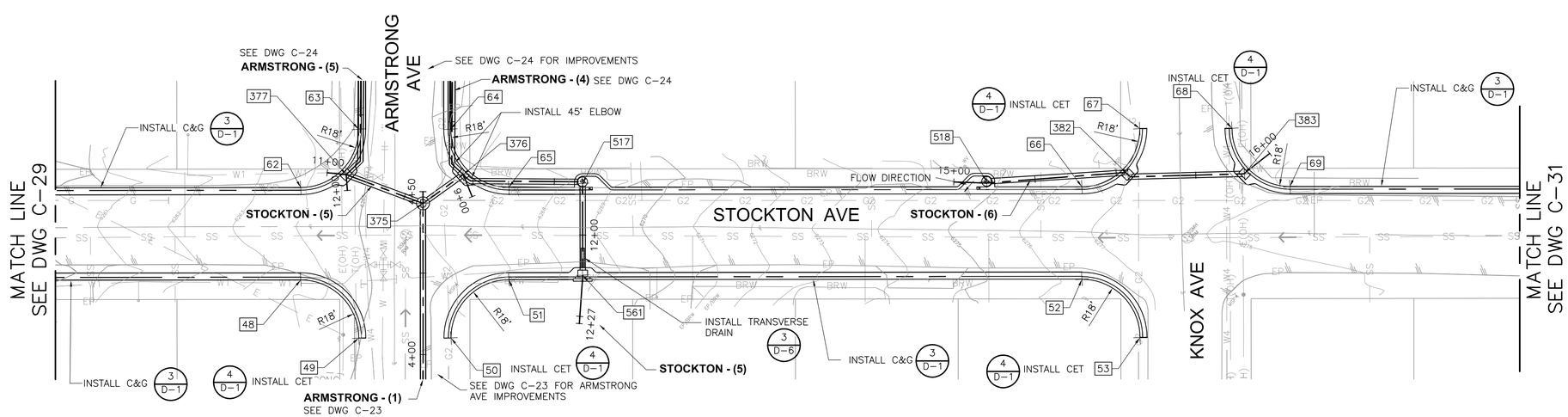

STOCKTON AVE

PLAN

1" = 20'
10 0 20

100% BID SET

REV	DATE	DESCRIPTION	BY

WARNING
0 1/2" 1"
IF THIS BAR SCALE DOES NOT MEASURE 1" THIS DWG HAS BEEN REDUCED SCALE ACCORDINGLY

CITY OF SOUTH LAKE TAHOE
DEPARTMENT OF PUBLIC WORKS
1052 TATA LANE
SOUTH LAKE TAHOE, CA 96150
Ph: (530) 542-6030 Fax: (530) 541-7524

REGISTERED PROFESSIONAL ENGINEER
RICHARD H. VADEN JR.
No. C80207
Exp. 09/30/16
CIVIL
STATE OF CALIFORNIA

CDM Smith
12313 Soaring Way, Suite 2-D
Truckee, California 96161
Tel (530) 582-7235
Fax (530) 582-1098

DESIGNED BY: RHV
DRAWN BY: OMN
SHEET CHK'D BY: RHV
CROSS CHK'D BY: SLS
DATE: FEBRUARY 20, 2015

SIERRA TRACT PH 3 & 4 EROSION CONTROL PROJECT
SHEET TITLE
STOCKTON AVE PLAN AND PROFILE

JOB NO. 27497-93981
SCALE: AS NOTED
SHEET 37 OF 57
DWG. NO: C-30

©2012 CDM SMITH ALL RIGHTS RESERVED.
REUSE OF DOCUMENTS: THESE DOCUMENTS AND DESIGNS PROVIDED BY PROFESSIONAL SERVICE, INCORPORATED HEREIN, ARE THE PROPERTY OF CDM SMITH AND ARE NOT TO BE USED, IN WHOLE OR PART, FOR ANY OTHER PROJECT WITHOUT THE WRITTEN AUTHORIZATION OF CDM SMITH.

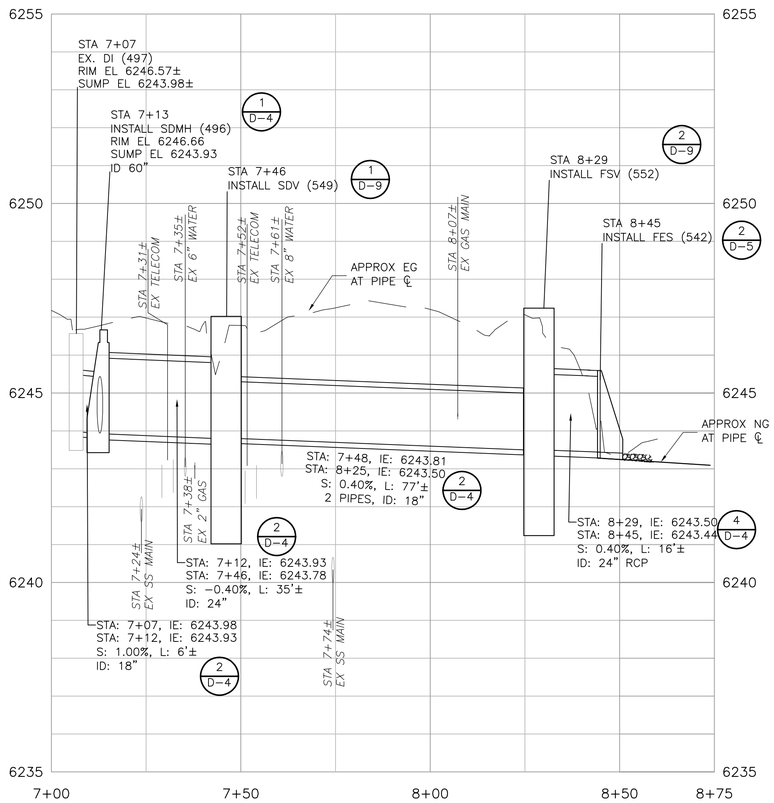

SIERRA - (3)

SEE DWG C-32 FOR SIERRA PLAN

PROFILE SCALES
HORIZ: 1"=20'
VERT: 1"=2'

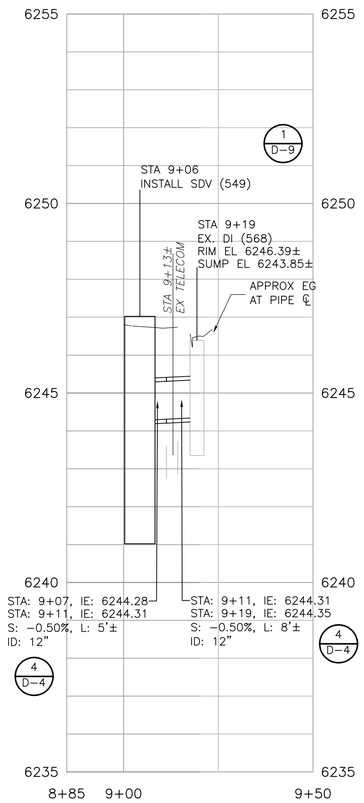

SIERRA - (4)

SEE DWG C-32 FOR SIERRA PLAN

NOTES:

1. INSTALL CURB DRIVEWAY TRANSITIONS AT ALL DRIVEWAY CROSSINGS UNLESS OTHERWISE INDICATED ON THE PLANS. (5/D-1)
2. INSTALL CURB END TRANSITIONS AT TERMINATIONS OF ALL NEW CURB AND GUTTER SECTIONS. (4/D-1)
3. INSTALL CURB CORNER TRANSITIONS IN ALL LOCATIONS WHERE NEW CURB AND GUTTER CONTINUES AROUND STREET CORNERS. (7/D-1)
4. MATCH EXISTING TOP BACK OF CURB, MATCH FLOW LINE AND INSTALL COLD JOINT TIE-INS WHEN TRANSITIONING TO EXISTING CURB AND GUTTER OR DRIVEWAYS.
5. # SEE SHEETS G-4 & G-5 FOR DATA POINT TABLES.

STOCKTON AVE

PLAN

1" = 20'
10 0 20

100% BID SET

REV	DATE	DESCRIPTION	BY

WARNING
0 1/2" 1"
IF THIS BAR SCALE DOES NOT MEASURE 1" THIS DWG HAS BEEN REDUCED SCALE ACCORDINGLY

CITY OF SOUTH LAKE TAHOE
DEPARTMENT OF PUBLIC WORKS
1052 TATA LANE
SOUTH LAKE TAHOE, CA 96150
Ph: (530) 542-6030 Fax: (530) 541-7524

REGISTERED PROFESSIONAL ENGINEER No. C80207 Exp. 09/30/16 CIVIL STATE OF CALIFORNIA

CDM Smith
12313 Soaring Way, Suite 2-D
Truckee, California 96161
Tel (530) 582-7235
Fax (530) 582-1098

DESIGNED BY: RHV
DRAWN BY: OMN
SHEET CHK'D BY: RHV
CROSS CHK'D BY: SLS
DATE: FEBRUARY 20, 2015

SIERRA TRACT PH 3 & 4 EROSION CONTROL PROJECT

SHEET TITLE
STOCKTON AVE PLAN

JOB NO. 27497-93981
SCALE: AS NOTED
SHEET 38 OF 57
DWG. NO:
C-31

© 2012 CDM SMITH ALL RIGHTS RESERVED.
REUSE OF DOCUMENTS: THESE DOCUMENTS AND DESIGNS PROVIDED BY PROFESSIONAL SERVICE, INCORPORATED HEREIN, ARE THE PROPERTY OF CDM SMITH AND ARE NOT TO BE USED, IN WHOLE OR PART, FOR ANY OTHER PROJECT WITHOUT THE WRITTEN AUTHORIZATION OF CDM SMITH.

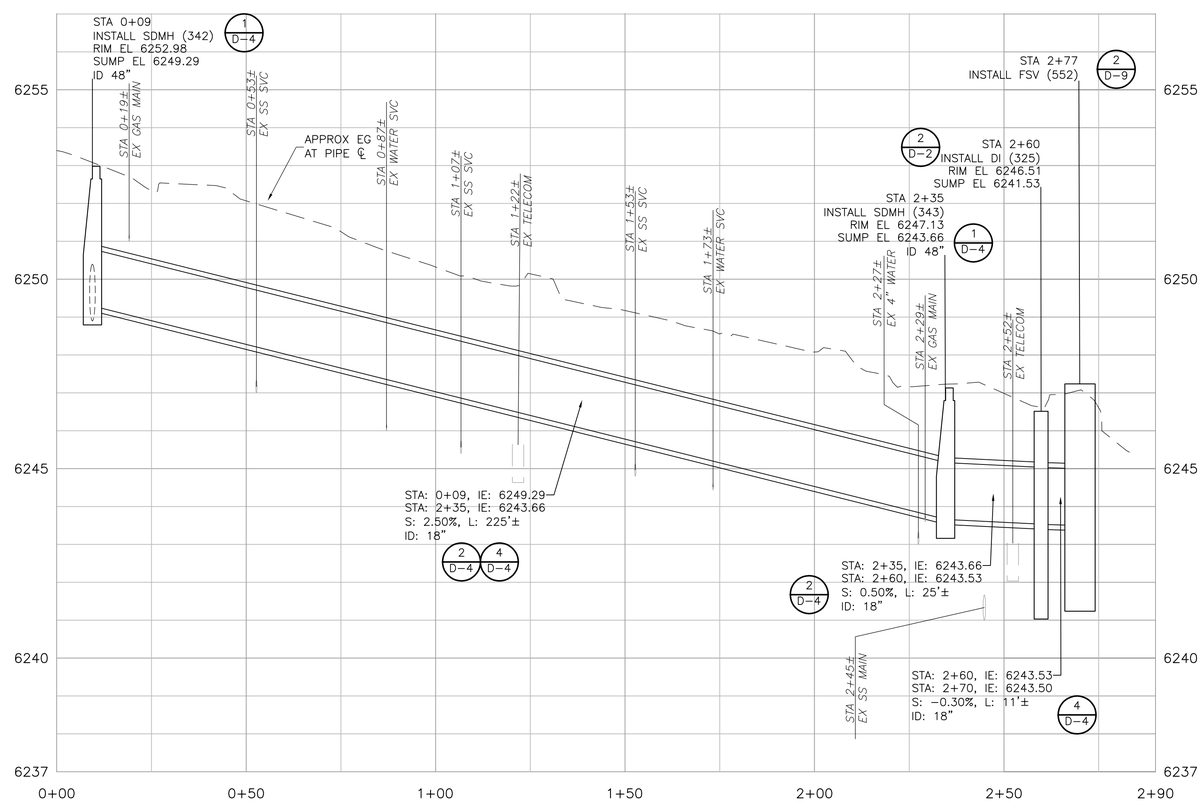

SIERRA - (1)

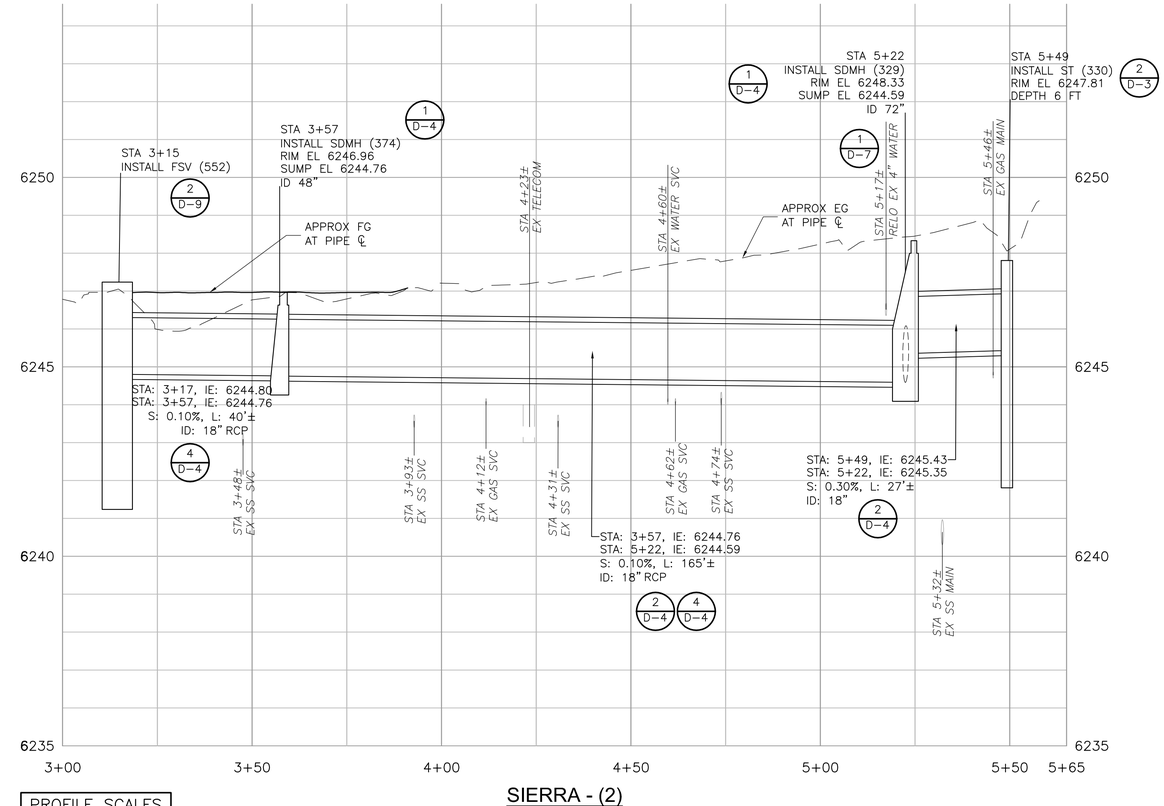

SIERRA - (2)

PROFILE SCALES
HORIZ: 1"=20'
VERT: 1"=2'

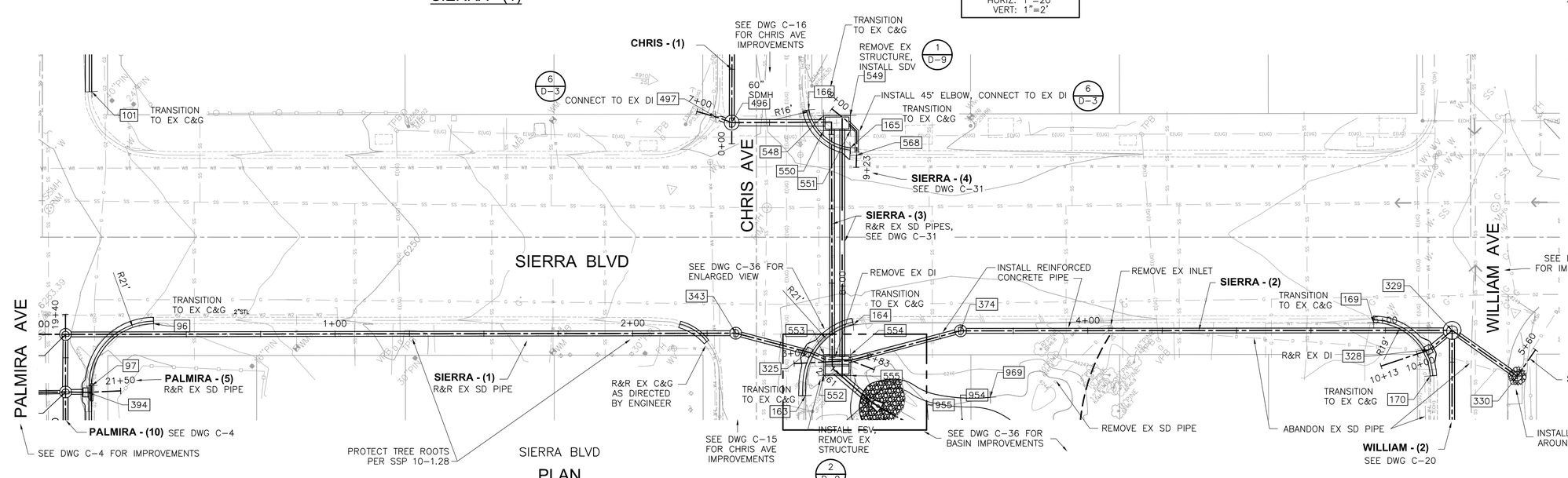

SIERRA BLVD
PLAN

NOTES:

1. INSTALL CURB DRIVEWAY TRANSITIONS AT ALL DRIVEWAY CROSSINGS UNLESS OTHERWISE INDICATED ON THE PLANS. (5/D-1)
2. INSTALL CURB END TRANSITIONS AT TERMINATIONS OF ALL NEW CURB AND GUTTER SECTIONS. (4/D-1)
3. INSTALL CURB CORNER TRANSITIONS IN ALL LOCATIONS WHERE NEW CURB AND GUTTER CONTINUES AROUND STREET CORNERS. (7/D-1)
4. MATCH EXISTING TOP BACK OF CURB, MATCH FLOW LINE AND INSTALL COLD JOINT TIE-INS WHEN TRANSITIONING TO EXISTING CURB AND GUTTER OR DRIVEWAYS.
5. # SEE SHEETS G-4 & G-5 FOR DATA POINT TABLES.

100% BID SET

REV	DATE	DESCRIPTION	BY

WARNING
0 1/2" 1"
IF THIS BAR SCALE DOES NOT MEASURE 1" THIS DWG HAS BEEN REDUCED SCALE ACCORDINGLY

CITY OF SOUTH LAKE TAHOE
DEPARTMENT OF PUBLIC WORKS
1052 TATA LANE
SOUTH LAKE TAHOE, CA 96150
Ph: (530) 542-6030 Fax: (530) 541-7524

REGISTERED PROFESSIONAL ENGINEER
RICHARD H. VADEN JR.
No. C80207
Exp. 09/30/16
CIVIL
STATE OF CALIFORNIA

CDM Smith
12313 Soaring Way, Suite 2-D
Truckee, California 96161
Tel (530) 582-7235
Fax (530) 582-1098

DESIGNED BY: RHV
DRAWN BY: OMN
SHEET CHK'D BY: RHV
CROSS CHK'D BY: SLS
DATE: FEBRUARY 20, 2015

SIERRA TRACT PH 3 & 4 EROSION CONTROL PROJECT

SHEET TITLE
SIERRA BLVD PLAN AND PROFILE

JOB NO. 27497-93981
SCALE: AS NOTED
SHEET 39 OF 57
DWG. NO:
C-32

© 2012 CDM SMITH ALL RIGHTS RESERVED.
REUSE OF DOCUMENTS: THESE DOCUMENTS AND DESIGNS PROVIDED BY PROFESSIONAL SERVICE, INCORPORATED HEREIN, ARE THE PROPERTY OF CDM SMITH AND ARE NOT TO BE USED, IN WHOLE OR PART, FOR ANY OTHER PROJECT WITHOUT THE WRITTEN AUTHORIZATION OF CDM SMITH.

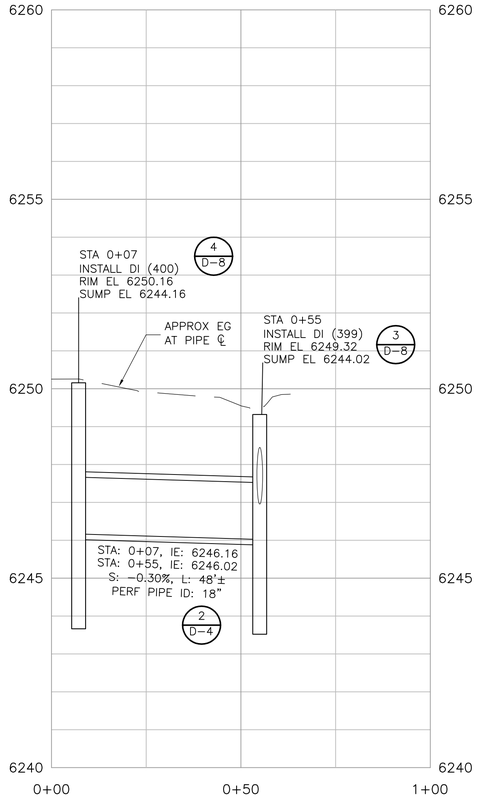

RENO - (1)

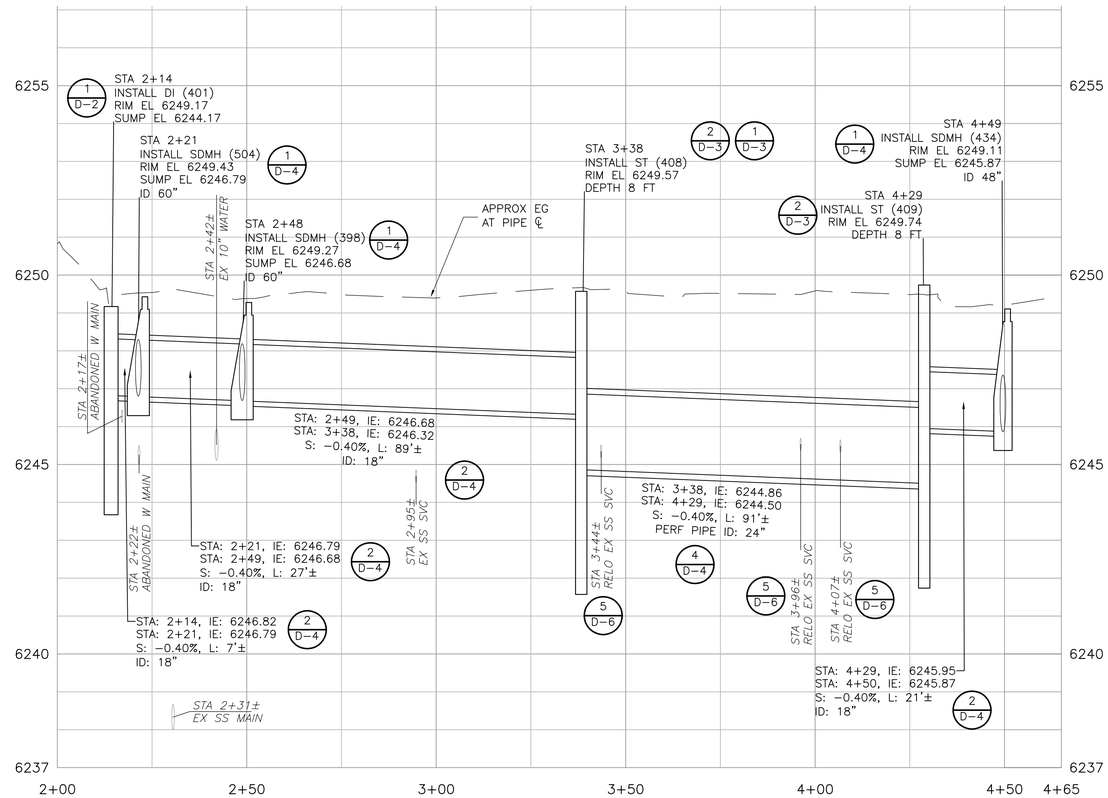

RENO - (2)

PROFILE SCALES
HORIZ: 1"=20'
VERT: 1"=2'

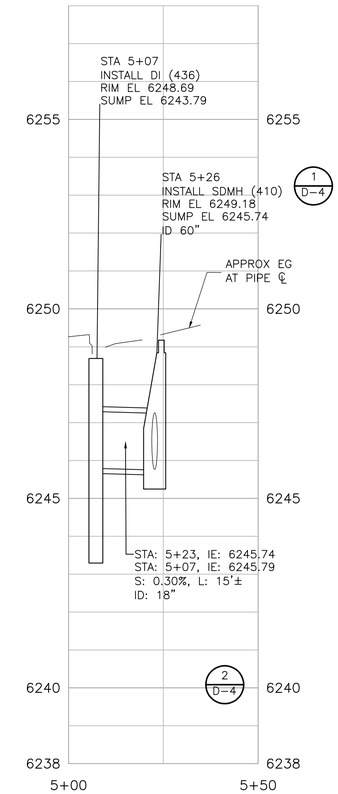

RENO - (3)

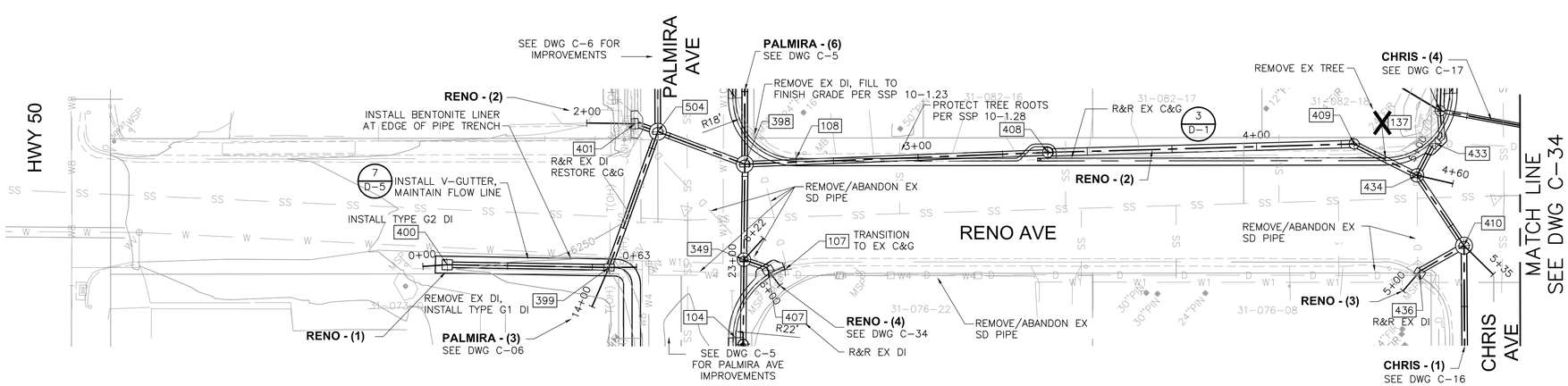

RENO AVE

PLAN

NOTES:

1. INSTALL CURB DRIVEWAY TRANSITIONS AT ALL DRIVEWAY CROSSINGS UNLESS OTHERWISE INDICATED ON THE PLANS. (5 D-1)
2. INSTALL CURB END TRANSITIONS AT TERMINATIONS OF ALL NEW CURB AND GUTTER SECTIONS. (4 D-1)
3. INSTALL CURB CORNER TRANSITIONS IN ALL LOCATIONS WHERE NEW CURB AND GUTTER CONTINUES AROUND STREET CORNERS. (7 D-1)
4. MATCH EXISTING TOP BACK OF CURB, MATCH FLOW LINE AND INSTALL COLD JOINT TIE-INS WHEN TRANSITIONING TO EXISTING CURB AND GUTTER OR DRIVEWAYS.
5. # SEE SHEETS G-4 & G-5 FOR DATA POINT TABLES.

1" = 20'
10 0 20

100% BID SET

REV	DATE	DESCRIPTION	BY

WARNING
0 1/2" 1"
IF THIS BAR SCALE DOES NOT MEASURE 1" THIS DWG HAS BEEN REDUCED SCALE ACCORDINGLY

CITY OF SOUTH LAKE TAHOE
DEPARTMENT OF PUBLIC WORKS
1052 TATA LANE
SOUTH LAKE TAHOE, CA 96150
Ph: (530) 542-6030 Fax: (530) 541-7524

REGISTERED PROFESSIONAL ENGINEER No. C80207 Exp. 09/30/16 CIVIL STATE OF CALIFORNIA

CDM Smith
12313 Soaring Way, Suite 2-D
Truckee, California 96161
Tel (530) 582-7235
Fax (530) 582-1098

DESIGNED BY: RHV
DRAWN BY: OMN
SHEET CHK'D BY: RHV
CROSS CHK'D BY: SLS
DATE: FEBRUARY 20, 2015

SIERRA TRACT PH 3 & 4 EROSION CONTROL PROJECT
SHEET TITLE
RENO AVE PLAN AND PROFILE

JOB NO. 27497-93981
SCALE: AS NOTED
SHEET 40 OF 57
DWG. NO:
C-33

© 2012 CDM SMITH ALL RIGHTS RESERVED.
REUSE OF DOCUMENTS: THESE DOCUMENTS AND DESIGNS PROVIDED BY PROFESSIONAL SERVICE, INCORPORATED HEREIN, ARE THE PROPERTY OF CDM SMITH AND ARE NOT TO BE USED, IN WHOLE OR PART, FOR ANY OTHER PROJECT WITHOUT THE WRITTEN AUTHORIZATION OF CDM SMITH.

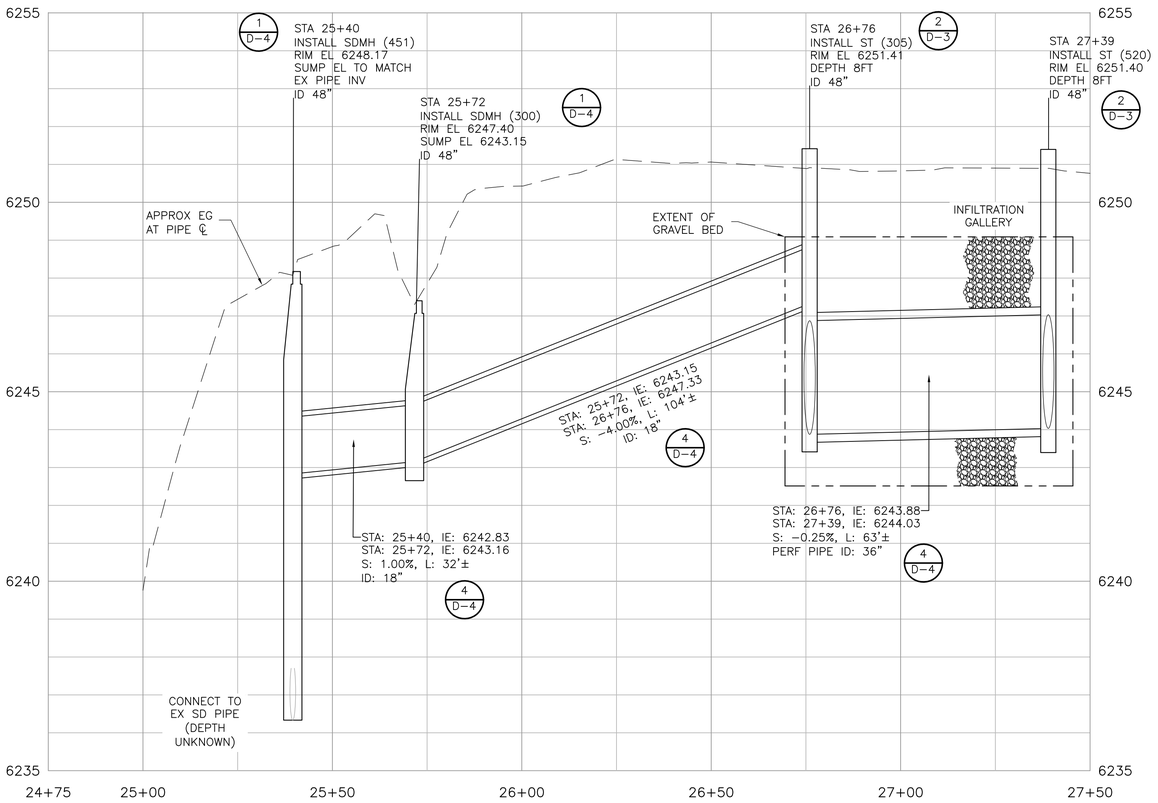

RIVER IG - (1)

SEE DWG C-35 FOR PLAN

PROFILE SCALES

HORIZ: 1"=20'
VERT: 1"=2'

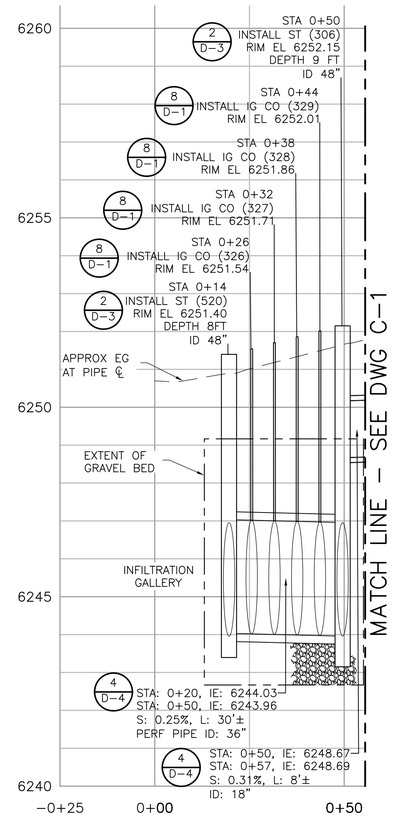

PALMIRA - (1)

SEE DWG C-1 AND C-35 FOR PLAN

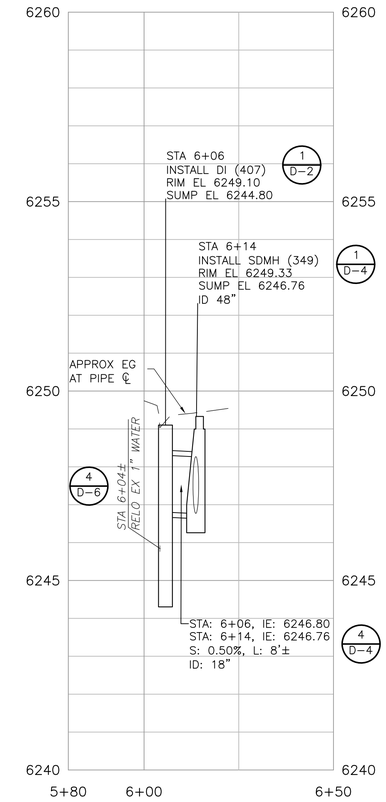

RENO - (4)

SEE DWG C-33 FOR PLAN

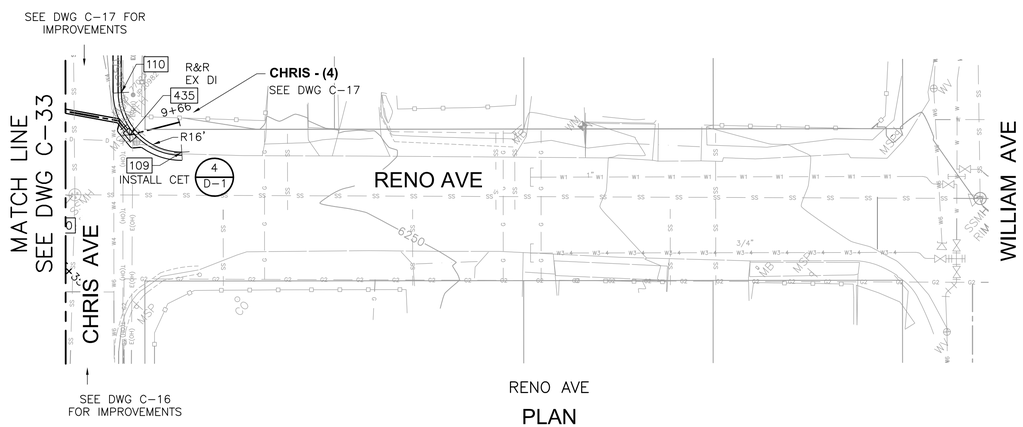

RENO AVE

PLAN

NOTES:

1. INSTALL CURB DRIVEWAY TRANSITIONS AT ALL DRIVEWAY CROSSINGS UNLESS OTHERWISE INDICATED ON THE PLANS. (5/D-1)
2. INSTALL CURB END TRANSITIONS AT TERMINATIONS OF ALL NEW CURB AND GUTTER SECTIONS. (4/D-1)
3. INSTALL CURB CORNER TRANSITIONS IN ALL LOCATIONS WHERE NEW CURB AND GUTTER CONTINUES AROUND STREET CORNERS. (7/D-1)
4. MATCH EXISTING TOP BACK OF CURB, MATCH FLOW LINE AND INSTALL COLD JOINT TIE-INS WHEN TRANSITIONING TO EXISTING CURB AND GUTTER OR DRIVEWAYS.
5. # SEE SHEETS G-4 & G-5 FOR DATA POINT TABLES.

1" = 20'

100% BID SET

REV	DATE	DESCRIPTION	BY

WARNING
0 1/2" 1"
IF THIS BAR SCALE DOES NOT MEASURE 1" THIS DWG HAS BEEN REDUCED SCALE ACCORDINGLY

CITY OF SOUTH LAKE TAHOE
DEPARTMENT OF PUBLIC WORKS
1052 TATA LANE
SOUTH LAKE TAHOE, CA 96150
Ph: (530) 542-6030 Fax: (530) 541-7524

REGISTERED PROFESSIONAL ENGINEER No. C80207 Exp. 09/30/16 CIVIL STATE OF CALIFORNIA

CDM Smith
12313 Soaring Way, Suite 2-D
Truckee, California 96161
Tel (530) 582-7235
Fax (530) 582-1098

DESIGNED BY: RHV
DRAWN BY: OMN
SHEET CHK'D BY: RHV
CROSS CHK'D BY: SLS
DATE: MAY 8, 2015

SIERRA TRACT PH 3 & 4 EROSION CONTROL PROJECT

SHEET TITLE
RENO AVE
RIVER INFILTRATION GALLERY PROFILES

JOB NO. 27497-93981
SCALE: AS NOTED
SHEET 41 OF 57
DWG. NO: C-34

© 2012 CDM SMITH ALL RIGHTS RESERVED.
REUSE OF DOCUMENTS: THESE DOCUMENTS AND DESIGNS PROVIDED BY PROFESSIONAL SERVICE, INCORPORATED HEREIN, ARE THE PROPERTY OF CDM SMITH AND ARE NOT TO BE USED, IN WHOLE OR PART, FOR ANY OTHER PROJECT WITHOUT THE WRITTEN AUTHORIZATION OF CDM SMITH.

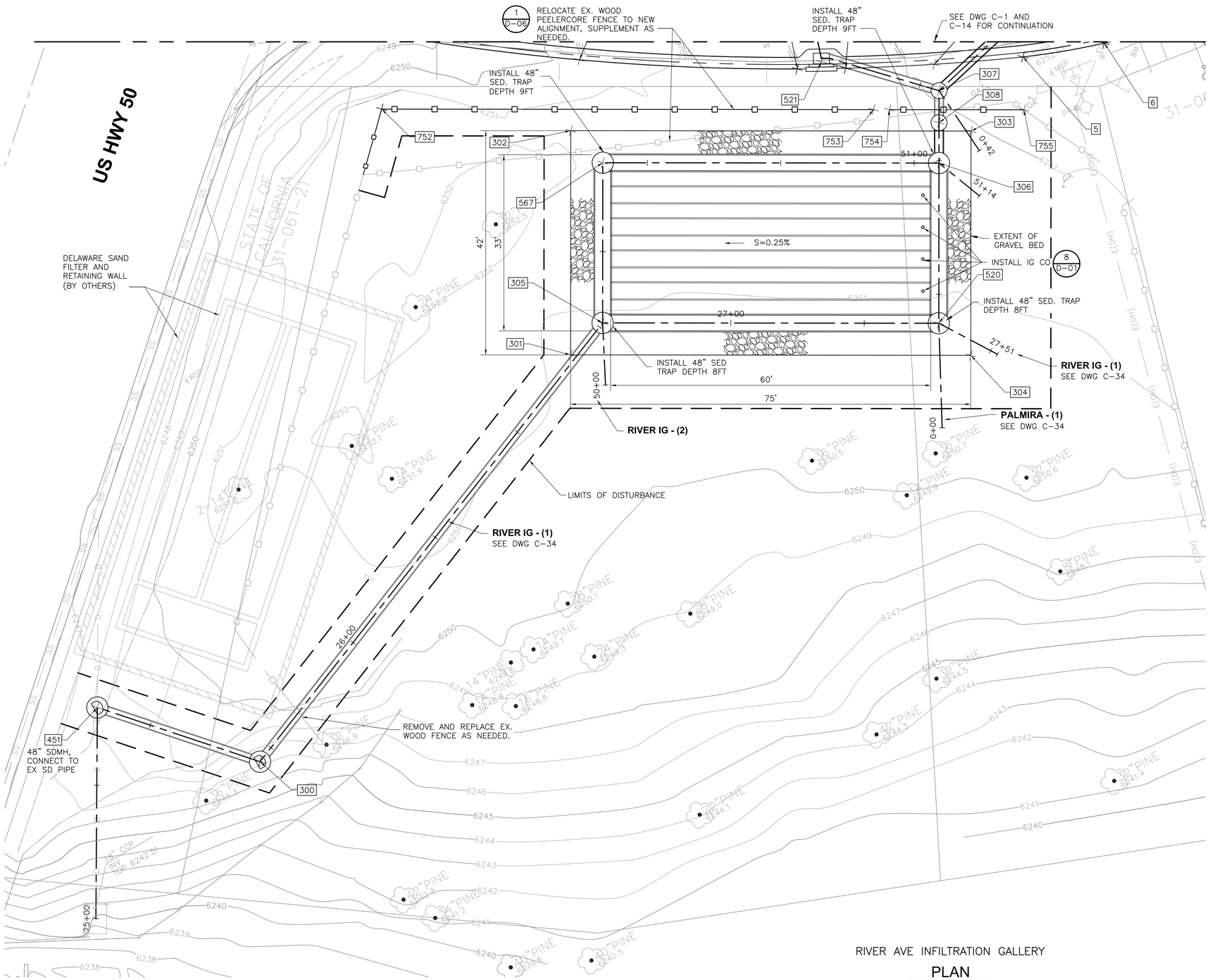

RIVER AVE INFILTRATION GALLERY

PLAN

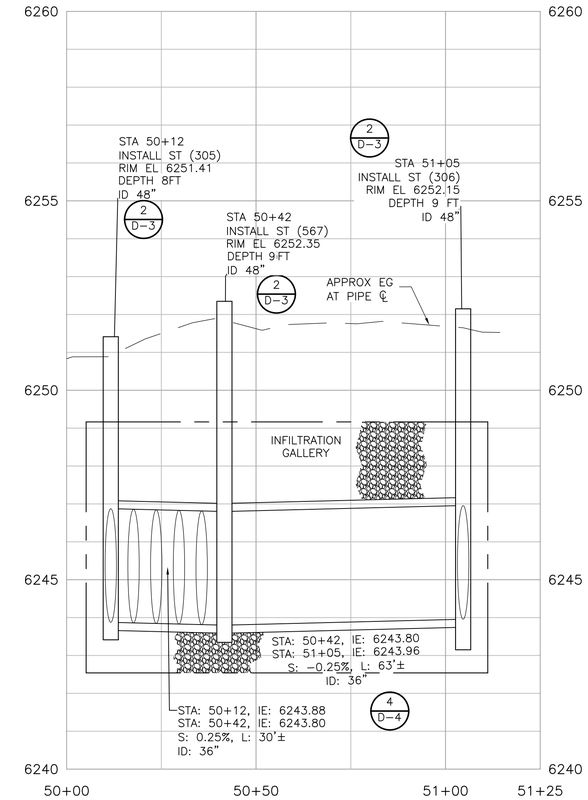

RIVER IG - (2)

PROFILE SCALES
HORIZ: 1"=20'
VERT: 1"=2'

NOTES:

1. MAXIMUM EXCAVATION DEPTH EQUALS 8FT BELOW GROUND SURFACE
2. SEE SPECIAL PROVISIONS FOR REVEGETATION REQUIREMENTS.
3. # SEE SHEETS G-4 & G-5 FOR DATA POINT TABLES.

1" = 10'

5 0 10

REV	DATE	DESCRIPTION	BY

WARNING

0 1/2" 1"

IF THIS BAR SCALE DOES NOT MEASURE 1" THIS DWG HAS BEEN REDUCED SCALE ACCORDINGLY

CITY OF SOUTH LAKE TAHOE

DEPARTMENT OF PUBLIC WORKS

1052 TATA LANE
SOUTH LAKE TAHOE, CA 96150
Ph: (530) 542-6030 Fax: (530) 541-7524

REGISTERED PROFESSIONAL ENGINEER No. C80207 Exp. 09/30/16 CIVIL STATE OF CALIFORNIA

CDM Smith

12313 Soaring Way, Suite 2-D
Truckee, California 96161
Tel (530) 582-7235
Fax (530) 582-1098

DESIGNED BY: RHV
DRAWN BY: OMN
SHEET CHK'D BY: RHV
CROSS CHK'D BY: SLS
DATE: MAY 8, 2015

SIERRA TRACT PH 3 & 4 EROSION CONTROL PROJECT

SHEET TITLE

RIVER AVE INFILTRATION GALLERY

JOB NO. 27497-93981
SCALE: AS NOTED
SHEET 42 OF 57
DWG. NO:
C-35

© 2012 CDM SMITH ALL RIGHTS RESERVED.
REUSE OF DOCUMENTS: THESE DOCUMENTS AND DESIGNS PROVIDED BY PROFESSIONAL SERVICE, INCORPORATED HEREIN, ARE THE PROPERTY OF CDM SMITH AND ARE NOT TO BE USED, IN WHOLE OR PART, FOR ANY OTHER PROJECT WITHOUT THE WRITTEN AUTHORIZATION OF CDM SMITH.

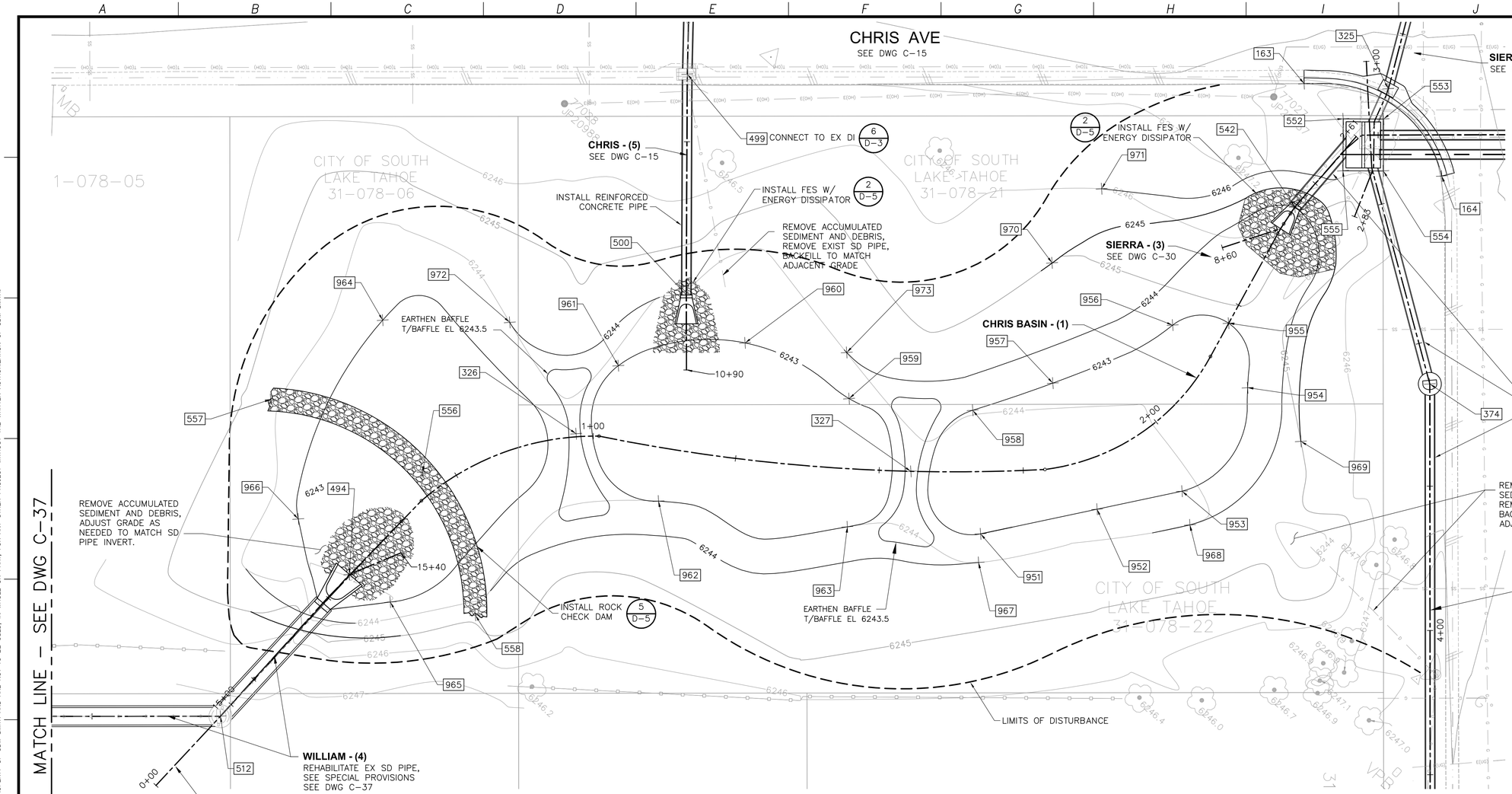

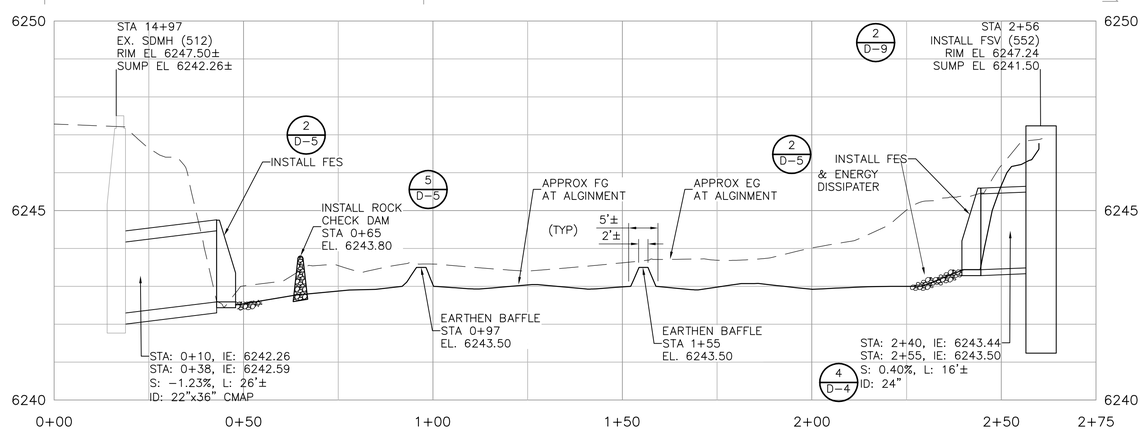

CHRIS BASIN - (1)

PROFILE SCALES
HORIZ: 1"=20'
VERT: 1"=2'

NOTES:

1. MINIMIZE DISTURBANCE TO EX VEGETATION. SEE SPECIAL PROVISIONS FOR VEGETATION STOCKPILING AND REVEGETATION REQUIREMENTS.
2. REGRADE SURFACE TO MATCH ELEVATIONS SHOWN AND MAINTAIN NATURAL APPEARANCE. EXCESS MATERIAL SHALL BE REMOVED AND DISPOSED OF.
3. # SEE SHEETS G-4 & G-5 FOR DATA POINT TABLES

1" = 10'

100% BID SET

REV	DATE	DESCRIPTION	BY

WARNING
0 1/2" 1"
IF THIS BAR SCALE DOES NOT MEASURE 1" THIS DWG HAS BEEN REDUCED SCALE ACCORDINGLY

CITY OF SOUTH LAKE TAHOE
DEPARTMENT OF PUBLIC WORKS
1052 TATA LANE
SOUTH LAKE TAHOE, CA 96150
Ph: (530) 542-6030 Fax: (530) 541-7524

REGISTERED PROFESSIONAL ENGINEER No. C80207 Exp. 09/30/16 CIVIL STATE OF CALIFORNIA

CDM Smith
12313 Soaring Way, Suite 2-D
Truckee, California 96161
Tel (530) 582-7235
Fax (530) 582-1098

DESIGNED BY: RHV
DRAWN BY: OMN
SHEET CHK'D BY: RHV
CROSS CHK'D BY: SLS
DATE: FEBRUARY 20, 2015

SIERRA TRACT PH 3 & 4 EROSION CONTROL PROJECT

SHEET TITLE
CHRIS AVE
EXIST BASIN REHABILITATION

JOB NO. 27497-93981
SCALE: AS NOTED
SHEET 43 OF 57
DWG. NO:
C-36

© 2012 CDM SMITH ALL RIGHTS RESERVED.
REUSE OF DOCUMENTS: THESE DOCUMENTS AND DESIGNS PROVIDED BY PROFESSIONAL SERVICE, INCORPORATED HEREIN, ARE THE PROPERTY OF CDM SMITH AND ARE NOT TO BE USED, IN WHOLE OR PART, FOR ANY OTHER PROJECT WITHOUT THE WRITTEN AUTHORIZATION OF CDM SMITH.

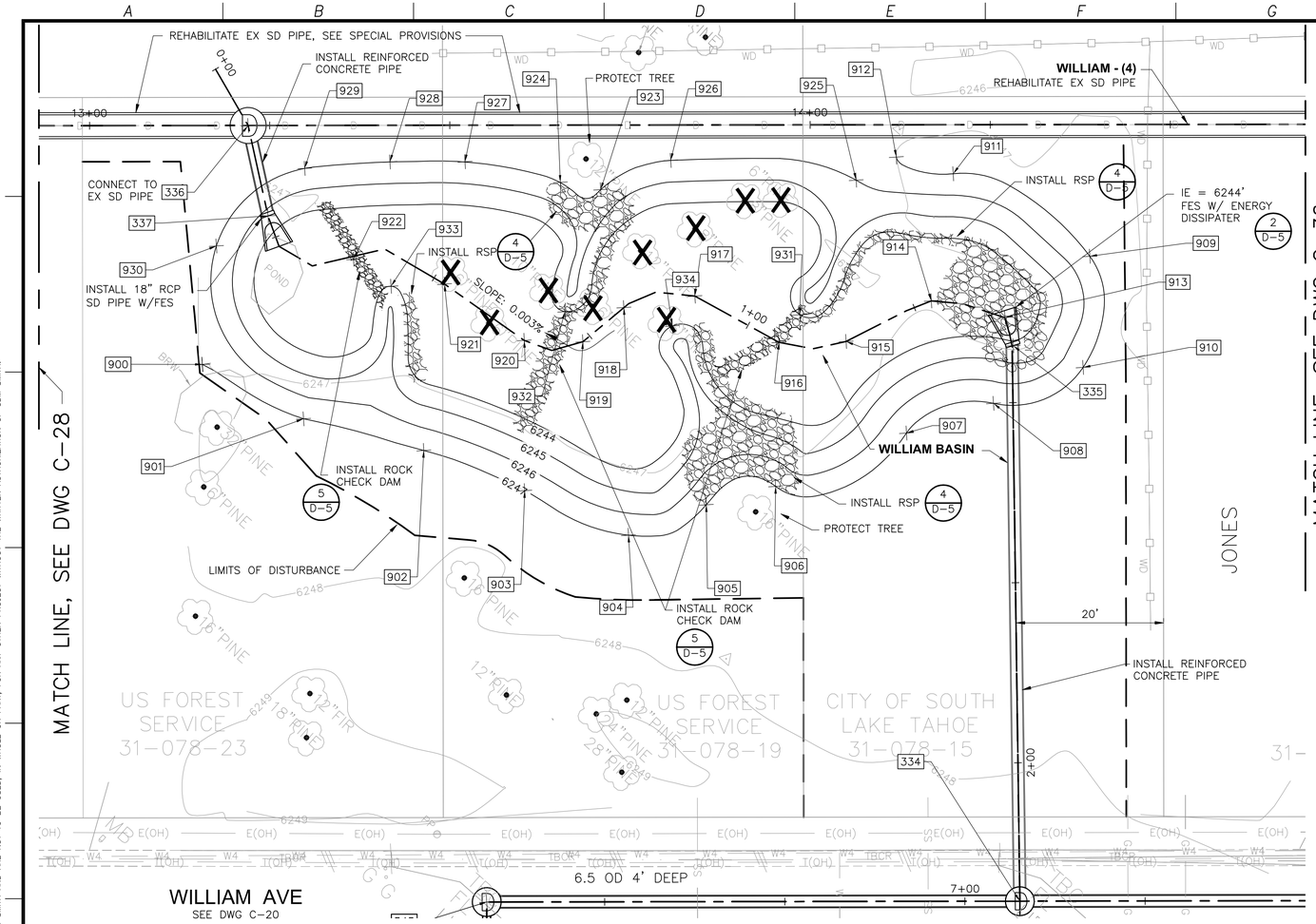

WILLIAM BASIN

PLAN

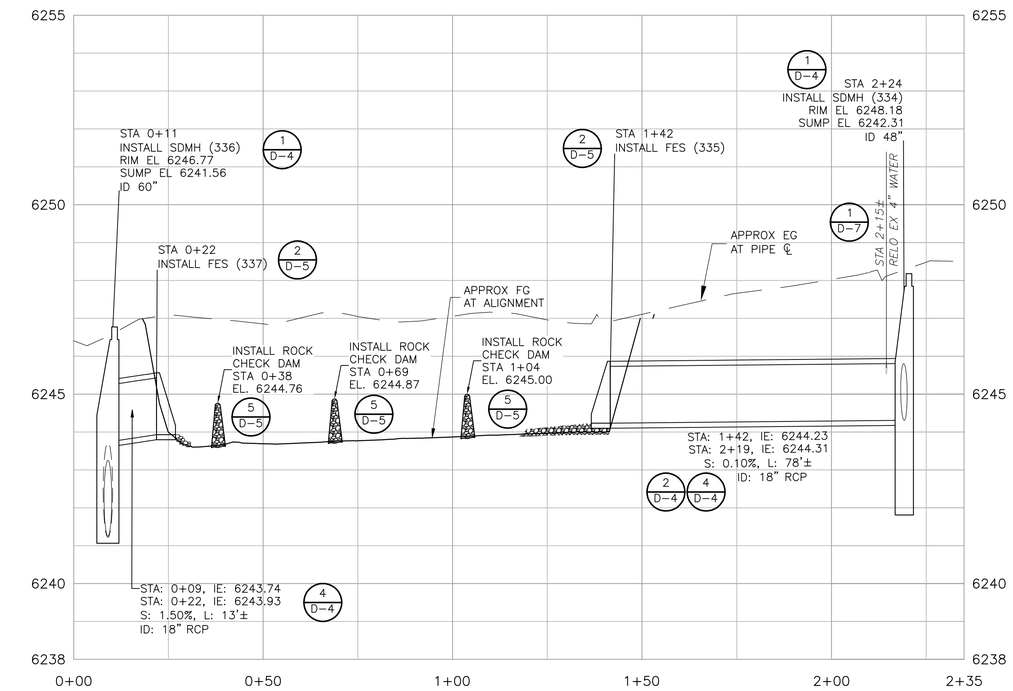

WILLIAM BASIN

PROFILE SCALES
HORIZ: 1"=20'
VERT: 1"=2'

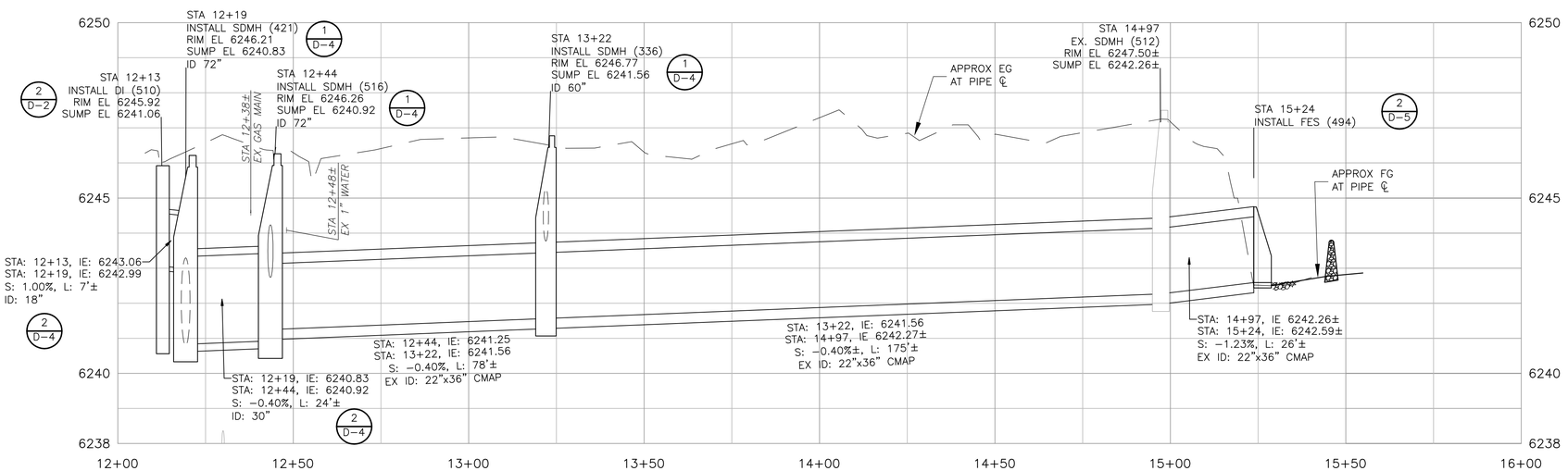

WILLIAM - (4)

NOTES:

1. SEE SPECIAL PROVISIONS FOR REVEGETATION REQUIREMENTS.
2. MAXIMUM BASIN EXCAVATION DEPTH EQUALS 3FT BELOW GROUND SURFACE.
3. # SEE SHEETS G-4 & G-5 FOR DATA POINT TABLES.

LEGEND:

X TREE TO BE REMOVED

1" = 10'

100% BID SET

REV	DATE	DESCRIPTION	BY

WARNING
0 1/2" 1"
IF THIS BAR SCALE DOES NOT MEASURE 1" THIS DWG HAS BEEN REDUCED SCALE ACCORDINGLY

CITY OF SOUTH LAKE TAHOE
DEPARTMENT OF PUBLIC WORKS
1052 TATA LANE
SOUTH LAKE TAHOE, CA 96150
Ph: (530) 542-6030 Fax: (530) 541-7524

REGISTERED PROFESSIONAL ENGINEER RICHARD H. VADEN No. C80207 Exp. 09/30/16 CIVIL STATE OF CALIFORNIA

CDM Smith
12313 Soaring Way, Suite 2-D
Truckee, California 96161
Tel (530) 582-7235
Fax (530) 582-1098

DESIGNED BY: RHV
DRAWN BY: OMN
SHEET CHK'D BY: RHV
CROSS CHK'D BY: SLS
DATE: FEBRUARY 20, 2015

SIERRA TRACT PH 3 & 4 EROSION CONTROL PROJECT
SHEET TITLE
WILLIAM AVE BASIN

JOB NO. 27497-93981
SCALE: AS NOTED
SHEET 44 OF 57
DWG. NO: C-37

© 2012 CDM SMITH ALL RIGHTS RESERVED.
REUSE OF DOCUMENTS: THESE DOCUMENTS AND DESIGNS PROVIDED BY PROFESSIONAL SERVICE, INCORPORATED HEREIN, ARE THE PROPERTY OF CDM SMITH AND ARE NOT TO BE USED, IN WHOLE OR PART, FOR ANY OTHER PROJECT WITHOUT THE WRITTEN AUTHORIZATION OF CDM SMITH.

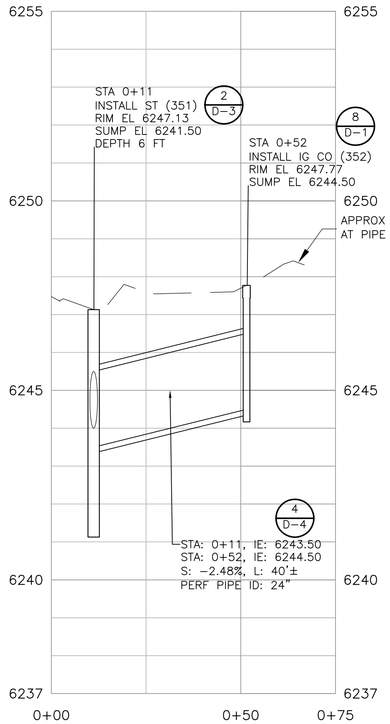

LODI IG - (1)

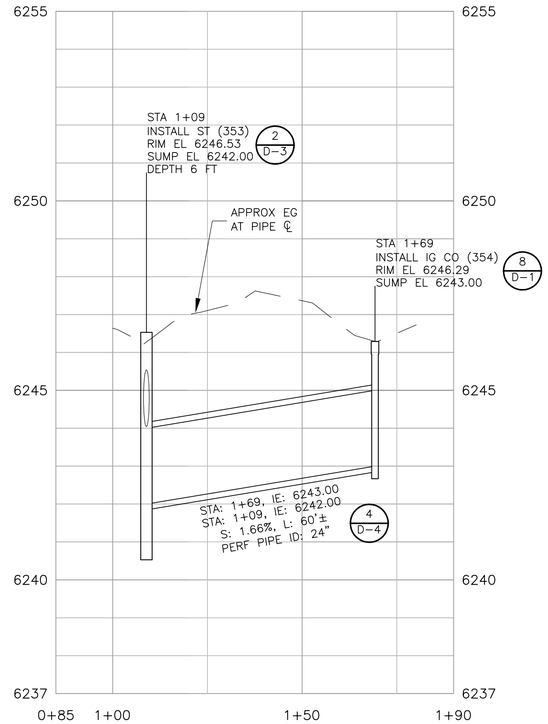

LODI IG - (2)

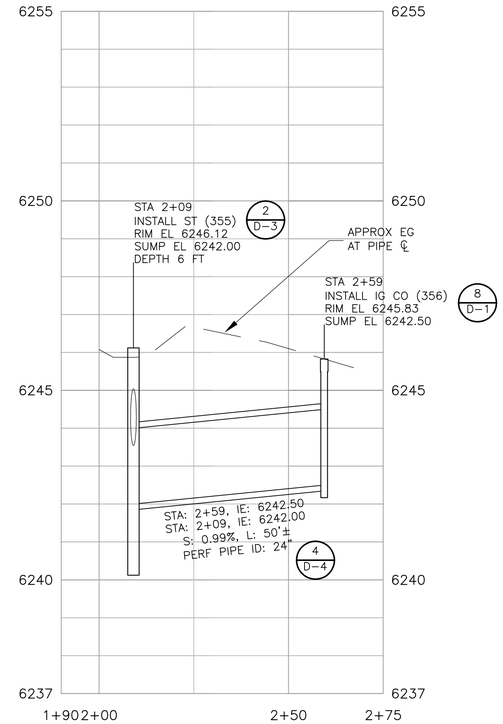

LODI IG - (3)

PROFILE SCALES
HORIZ: 1"=20'
VERT: 1"=2'

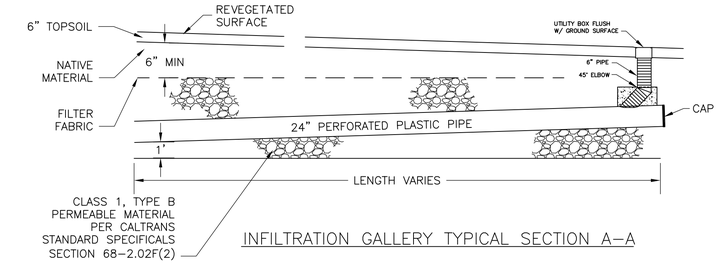

INFILTRATION GALLERY TYPICAL SECTION A–A

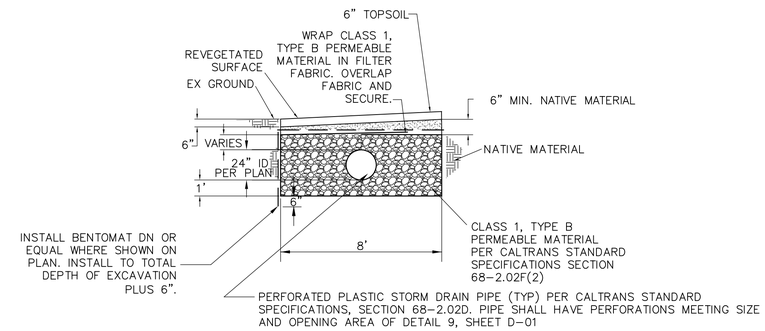

INFILTRATION GALLERY TYPICAL SECTION B–B

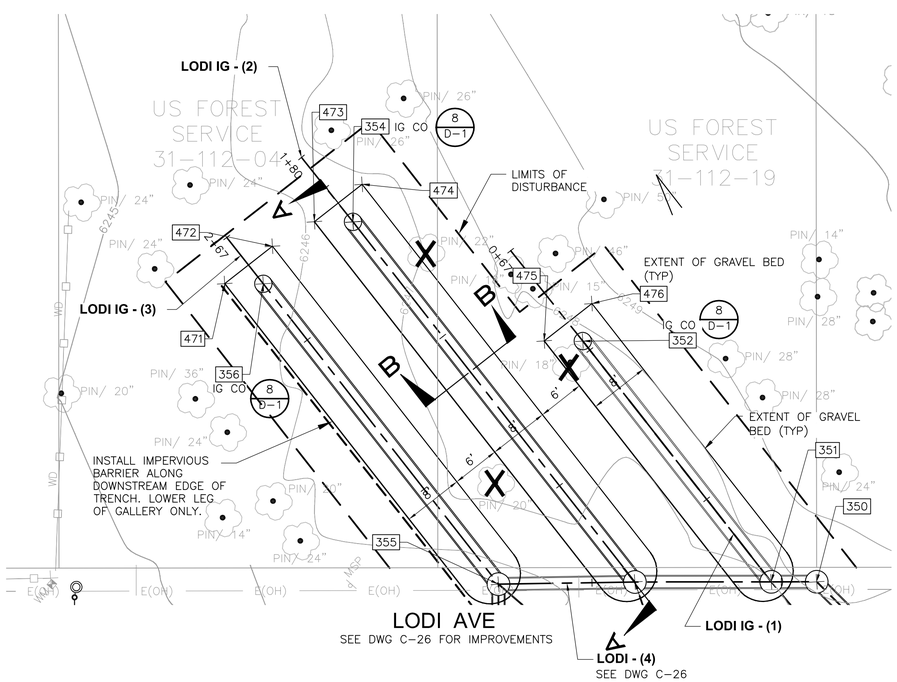

NOTES:

1. # SEE SHEETS G–4 & G–5 FOR DATA POINT TABLES.
2. MAXIMUM INFILTRATION TRENCH EXCAVATION DEPTH EQUALS 48" BELOW GROUND SURFACE.
3. SEE SPECIAL PROVISIONS FOR REVEGETATION REQUIREMENTS.
4. PROTECT EXISTING TREES AND TREE ROOTS UNLESS NOTED OTHERWISE.
5. SEE DETAIL THIS SHEET FOR TYPICAL CROSS SECTION.

LEGEND:

X TREE TO BE REMOVED

1" = 10'
5 0 10

100% BID SET

REV	DATE	DESCRIPTION	BY

WARNING
0 1/2" 1"
IF THIS BAR SCALE DOES NOT MEASURE 1" THIS DWG HAS BEEN REDUCED SCALE ACCORDINGLY

CITY OF SOUTH LAKE TAHOE
DEPARTMENT OF PUBLIC WORKS
1052 TATA LANE
SOUTH LAKE TAHOE, CA 96150
Ph: (530) 542-6030 Fax: (530) 541-7524

REGISTERED PROFESSIONAL ENGINEER
RICHARD H. VIADONA
No. C80207
Exp. 09/30/16
CIVIL
STATE OF CALIFORNIA

CDM Smith
12313 Soaring Way, Suite 2-D
Truckee, California 96161
Tel (530) 582-7235
Fax (530) 582-1098

DESIGNED BY: RHV
DRAWN BY: OMN
SHEET CHK'D BY: RHV
CROSS CHK'D BY: SLS
DATE: FEBRUARY 20, 2015

SIERRA TRACT PH 3 & 4 EROSION CONTROL PROJECT
SHEET TITLE
LODI AVE INFILTRATION GALLERY

JOB NO. 27497–93981
SCALE: AS NOTED
SHEET 45 OF 57
DWG. NO:
C-38

© 2012 CDM SMITH ALL RIGHTS RESERVED.
REUSE OF DOCUMENTS: THESE DOCUMENTS AND DESIGNS PROVIDED BY PROFESSIONAL SERVICE, INCORPORATED HEREIN, ARE THE PROPERTY OF CDM SMITH AND ARE NOT TO BE USED, IN WHOLE OR PART, FOR ANY OTHER PROJECT WITHOUT THE WRITTEN AUTHORIZATION OF CDM SMITH.

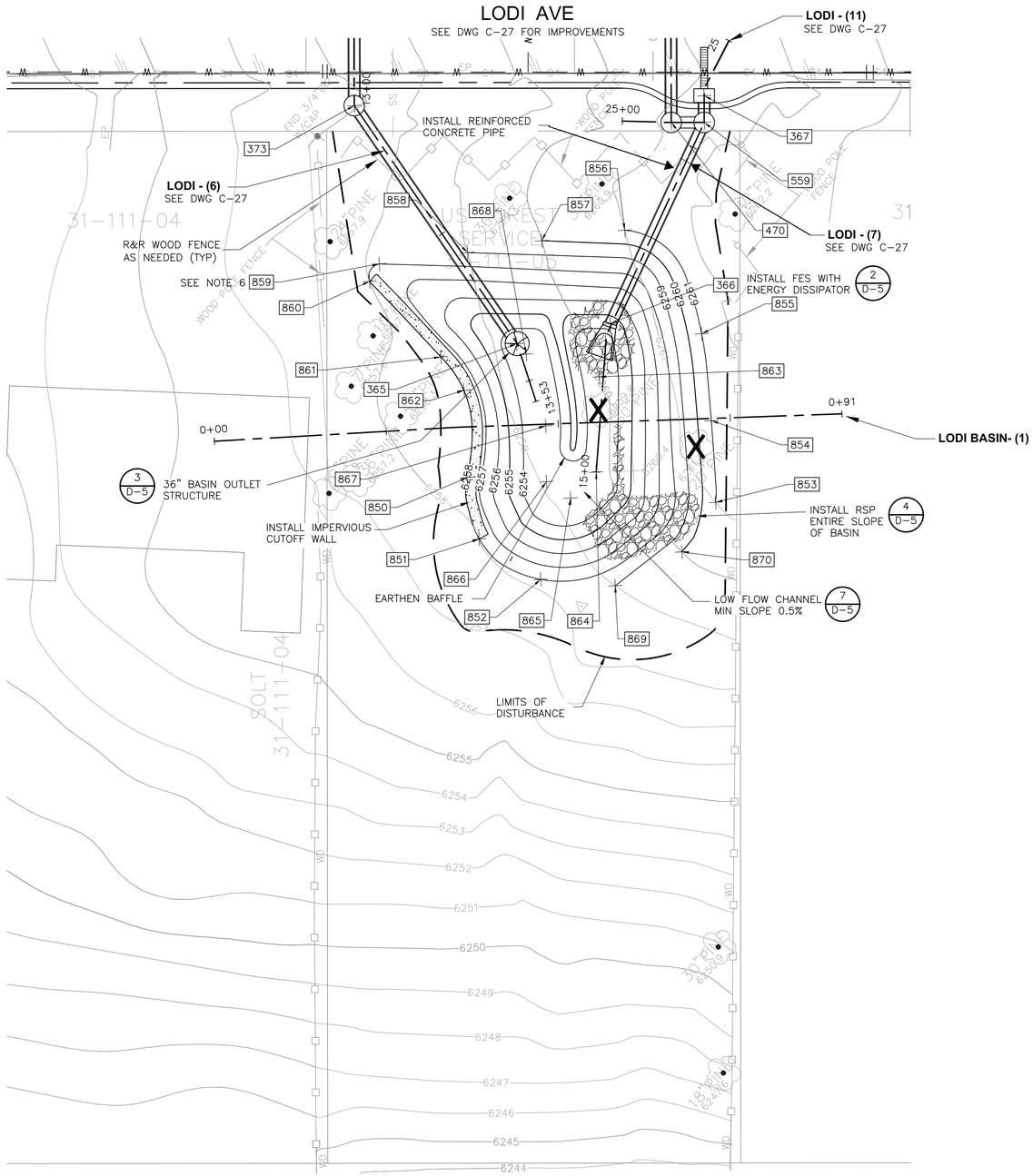

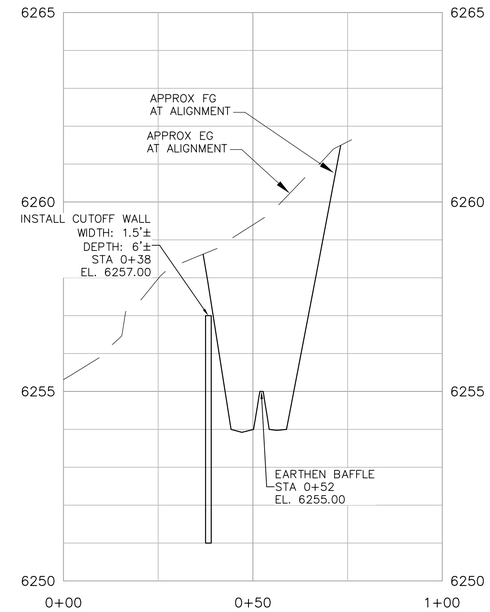

LODI BASIN - (1)

PROFILE SCALES
HORIZ: 1"=20'
VERT: 1"=2'

NOTES:

1. SEE SHEETS G-4 & G-5 FOR DATA POINT TABLES.
2. SIDE SLOPES ARE 2:1 WITH ROCK SLOPE PROTECTION.
3. MAXIMUM EXCAVATION DEPTH EQUALS 7 FEET BELOW GROUND SURFACE.
4. SEE SPECIAL PROVISIONS FOR REVEGETATION REQUIREMENTS AND CUTOFF WALL MIXTURE REQUIREMENTS.
5. PROTECT EXISTING TREES AND TREE ROOTS UNLESS NOTED OTHERWISE.
6. REMOVE EXISTING WOOD ZIG-ZAG FENCE AS NEEDED TO INSTALL IMPROVEMENTS. REINSTALL USING SAME MATERIALS WHEN CONSTRUCTION IS COMPLETE. SUPPLEMENT MATERIALS AS NEEDED.

LEGEND:

X TREE TO BE REMOVED

1" = 10'
5 0 10

100% BID SET

REV	DATE	DESCRIPTION	BY

WARNING
0 1/2" 1"
IF THIS BAR SCALE DOES NOT MEASURE 1" THIS DWG HAS BEEN REDUCED SCALE ACCORDINGLY

CITY OF SOUTH LAKE TAHOE
DEPARTMENT OF PUBLIC WORKS
1052 TATA LANE
SOUTH LAKE TAHOE, CA 96150
Ph: (530) 542-6030 Fax: (530) 541-7524

REGISTERED PROFESSIONAL ENGINEER
No. C80207
Exp. 09/30/16
CIVIL
STATE OF CALIFORNIA

CDM Smith
12313 Soaring Way, Suite 2-D
Truckee, California 96161
Tel (530) 582-7235
Fax (530) 582-1098

DESIGNED BY: RHV
DRAWN BY: OMN
SHEET CHK'D BY: RHV
CROSS CHK'D BY: SLS
DATE: FEBRUARY 20, 2015

SIERRA TRACT PH 3 & 4 EROSION CONTROL PROJECT
SHEET TITLE
LODI AVE DETENTION BASIN

JOB NO. 27497-93981
SCALE: AS NOTED
SHEET 46 OF 57
DWG. NO:
C-39

© 2012 CDM SMITH ALL RIGHTS RESERVED.
REUSE OF DOCUMENTS: THESE DOCUMENTS AND DESIGNS PROVIDED BY PROFESSIONAL SERVICE, INCORPORATED HEREIN, ARE THE PROPERTY OF CDM SMITH AND ARE NOT TO BE USED, IN WHOLE OR PART, FOR ANY OTHER PROJECT WITHOUT THE WRITTEN AUTHORIZATION OF CDM SMITH.

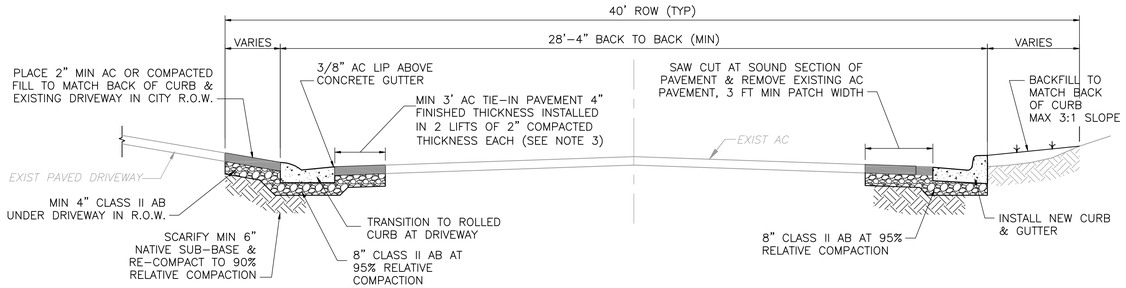

NOTES

1. CROSS SLOPES SHALL BE ADJUSTED TO PREVENT SAGS.
2. CONTRACTOR SHALL SET GRADES FOR CURB & GUTTER A MINIMUM OF 8 WORKING DAY HOURS IN ADVANCE OF POUR & NOTIFY THE ENGINEER FOR INSPECTION & APPROVAL.
3. AC PAVEMENT FOR DRIVEWAY SHALL MATCH EXISTING DRIVEWAY PAVEMENT OR BE 2" THICK, WHICHEVER IS GREATER. INSTALL DRIVEWAY TIE-IN WITH UNIFORM SLOPE AS NECESSARY TO MATCH BACK OF CURB.
4. SLOPE OF TIE-IN TO MATCH EXISTING CROSS SLOPE AS CLOSELY AS POSSIBLE, BUT 2% MINIMUM & 6% MAXIMUM. TIE-IN SLOPE TO VARY AS NEEDED TO MAINTAIN 0.5% MINIMUM LONGITUDINAL SLOPE ON GUTTER.
5. TOP BACK OF CURB SHALL BE SET TO MATCH EXISTING GRADE UNLESS OTHERWISE SPECIFIED IN THE FIELD BY ENGINEER.
6. PAVEMENT CUTTING OR GRINDING IS REQUIRED AT THE TIE-IN LINE TO EXISTING AC DRIVEWAYS.
7. CONTRACTOR SHALL PLACE ADDITIONAL DRIVEWAY TIE IN PAVING AS DIRECTED IN FIELD BY ENGINEER.

TYPICAL STREET SECTION WITH CURB AND GUTTER

DETAIL 1 – NTS

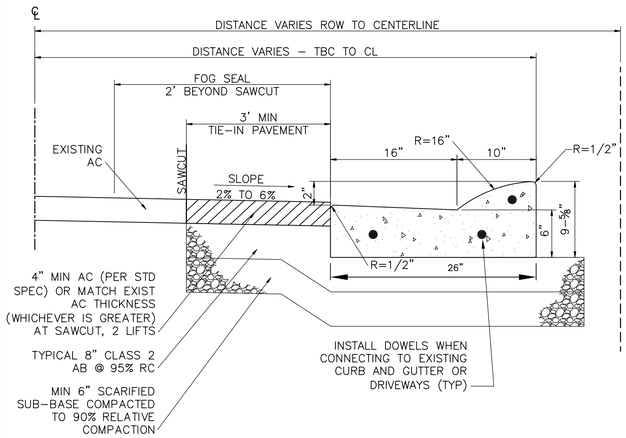

ROLLED CURB & GUTTER

DETAIL 2 – NTS

NOTES:

1. ALL CURB & GUTTER SHALL CONFORM TO CITY OF SOUTH LAKE TAHOE STANDARD DETAIL SD04.
2. WHEN CONNECTING TO EXISTING CURB AND GUTTER OR DRIVEWAYS, INSTALL NO. 5 18" LONG STEEL DOWELS AS SHOWN. DOWELS SHALL BE EITHER GREASED OR INSTALLED WIHTIN PVC SLEEVES.
3. TRANSITIONS TO EXISTING CURB AND GUTTER AND DRIVEWAYS SHALL BE SMOOTH AND OCCUR OVER AN 8-FOOT LENGTH.

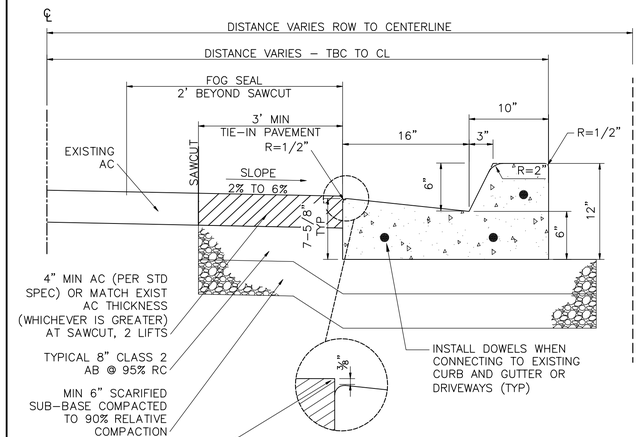

VERTICAL BATTERED CURB & GUTTER

DETAIL 3 – NTS

NOTES:

1. ALL CURB & GUTTER SHALL CONFORM TO CITY OF SOUTH LAKE TAHOE STANDARD DETAIL SD04.
2. WHEN CONNECTING TO EXISTING CURB AND GUTTER OR DRIVEWAYS, INSTALL NO. 5 18" LONG STEEL DOWELS AS SHOWN. DOWELS SHALL BE EITHER GREASED OR INSTALLED WIHTIN PVC SLEEVES.
3. TRANSITIONS TO EXISTING CURB AND GUTTER AND DRIVEWAYS SHALL BE SMOOTH AND OCCUR OVER AND 8-FOOT LENGTH.

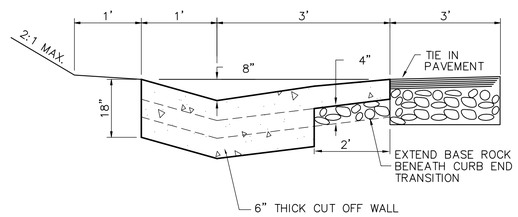

SECTION A–A

NOTE: SUBBASE AND BASE PREPARATION SHALL BE AS SPECIFIED FOR THE ROLLED CURB AND GUTTER.

CURB END TRANSITION

DETAIL 4 – NTS

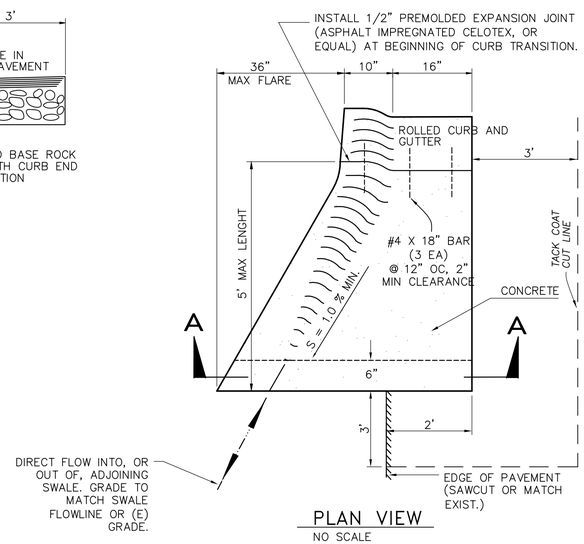

PLAN VIEW

NO SCALE

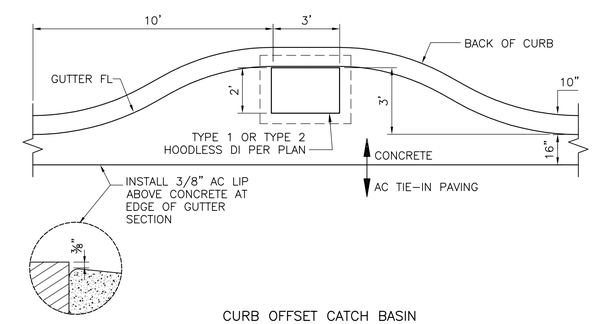

CURB OFFSET CATCH BASIN

DETAIL 6 – NTS

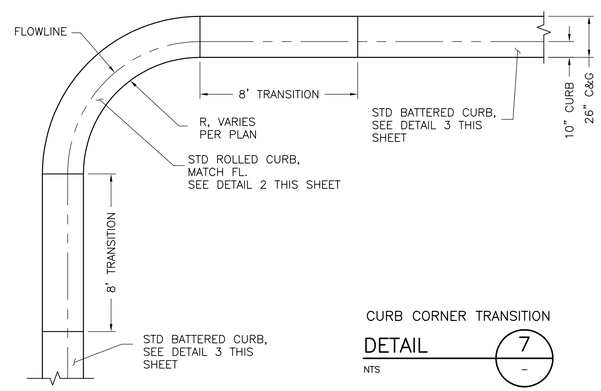

CURB CORNER TRANSITION

DETAIL 7 – NTS

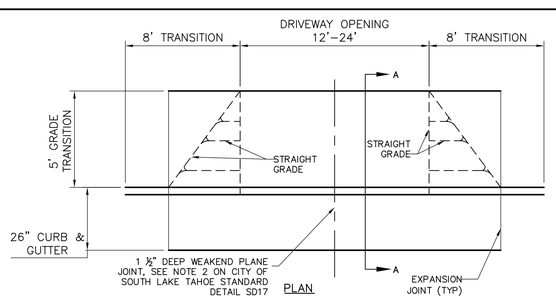

NOTES:

1. ALL CURB & GUTTER DRIVEWAY TRANSITION SHALL CONFORM TO CITY OF SOUTH LAKE TAHOE STANDARD DETAIL SD17.
2. CURB AND GUTTER DRIVEWAY TRANSITIONS SHALL BE INSTALLED AT ALL DRIVEWAY CROSSINGS UNLESS INDICATED OTHERWISE ON PLANS.

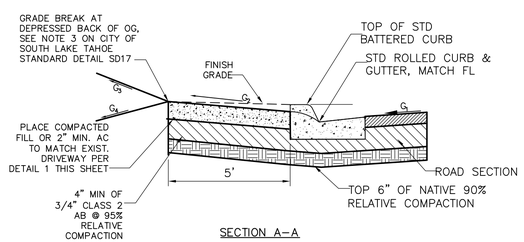

SECTION A–A

DRIVEWAY TRANSITION

DETAIL 5 – NTS

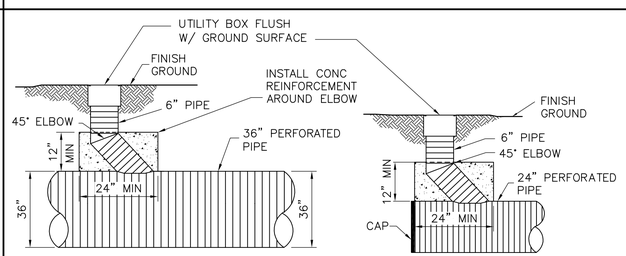

TYPICAL CLEANOUT, RIVER DR. INFILTRATION GALLERY

TYPICAL CLEAN OUT, LODI AVE. INFILTRATION GALLERY

INFILTRATION GALLERY CLEANOUT

DETAIL 8 – NTS

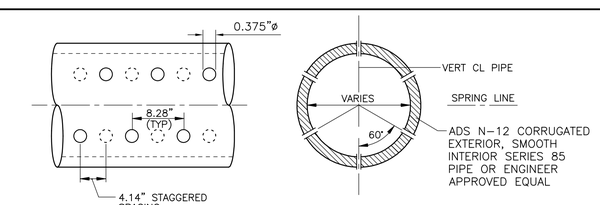

PERFORATED HDPE PIPE

DETAIL 9 – NTS

NOTES:

1. REFER TO DETAILS 2 & 4 ON SHEET D-04 FOR PIPE TRENCH AND BACKFILL REQUIREMENTS.
2. PERFORATION PATTERNS SHALL CONFORM WITH AASHTO M294

100% BID SET

REV	DATE	DESCRIPTION	BY

WARNING: 0 1/2" 1" — IF THIS BAR SCALE DOES NOT MEASURE 1" THIS DWG HAS BEEN REDUCED SCALE ACCORDINGLY

CITY OF SOUTH LAKE TAHOE
DEPARTMENT OF PUBLIC WORKS
1052 TATA LANE
SOUTH LAKE TAHOE, CA 96150
Ph: (530) 542-6030 Fax: (530) 541-7524

REGISTERED PROFESSIONAL ENGINEER No. C80207 Exp. 09/30/16 CIVIL STATE OF CALIFORNIA

CDM Smith
12313 Soaring Way, Suite 2-D
Truckee, California 96161
Tel (530) 582-7235
Fax (530) 582-1098

DESIGNED BY: RHV
DRAWN BY: OMN
SHEET CHK'D BY: RHV
CROSS CHK'D BY: SLS
DATE: FEBRUARY 20, 2015

SIERRA TRACT PH 3 & 4 EROSION CONTROL PROJECT
SHEET TITLE
CIVIL DETAILS 1

JOB NO. 27497-93981
SCALE: AS NOTED
SHEET 47 OF 57
DWG. NO: D-01

© 2012 CDM SMITH ALL RIGHTS RESERVED.
REUSE OF DOCUMENTS: THESE DOCUMENTS AND DESIGNS PROVIDED BY PROFESSIONAL SERVICE, INCORPORATED HEREIN, ARE THE PROPERTY OF CDM SMITH AND ARE NOT TO BE USED, IN WHOLE OR PART, FOR ANY OTHER PROJECT WITHOUT THE WRITTEN AUTHORIZATION OF CDM SMITH.

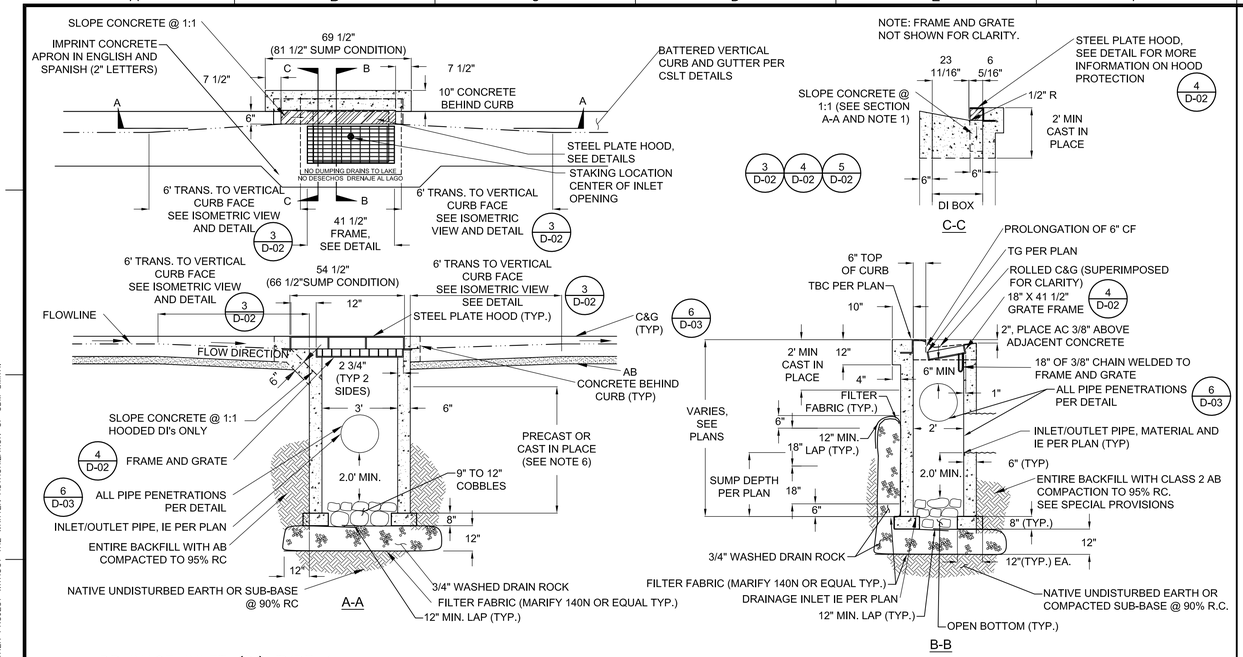

DRAINAGE INLET (DI) TYPE 1

DETAIL 1

NTS

NOTES:

1. REFER TO DRAINAGE INLET NOTES PROVIDED IN DETAIL 2 THIS SHEET.
2. HOODS SHALL BE INSTALLED FOR ALL DIs LOCATED WITHIN BATTERED CURB AND GUTTER SECTIONS. NO HOODS SHALL BE INSTALLED WHERE ROLLED CURB AND GUTTER IS SPECIFIED.
3. TYPE 18 GRATE SHALL BE USED FOR HOODED DIs AND TYPE 24 GRATES SHALL BE USED FOR NON-HOODED DIs.
4. MATCH ADJACENT CURB TYPE FOR NON-HOODED DIs.
5. SEE DETAIL 6 THIS SHEET FOR NON-HOODED DIs.

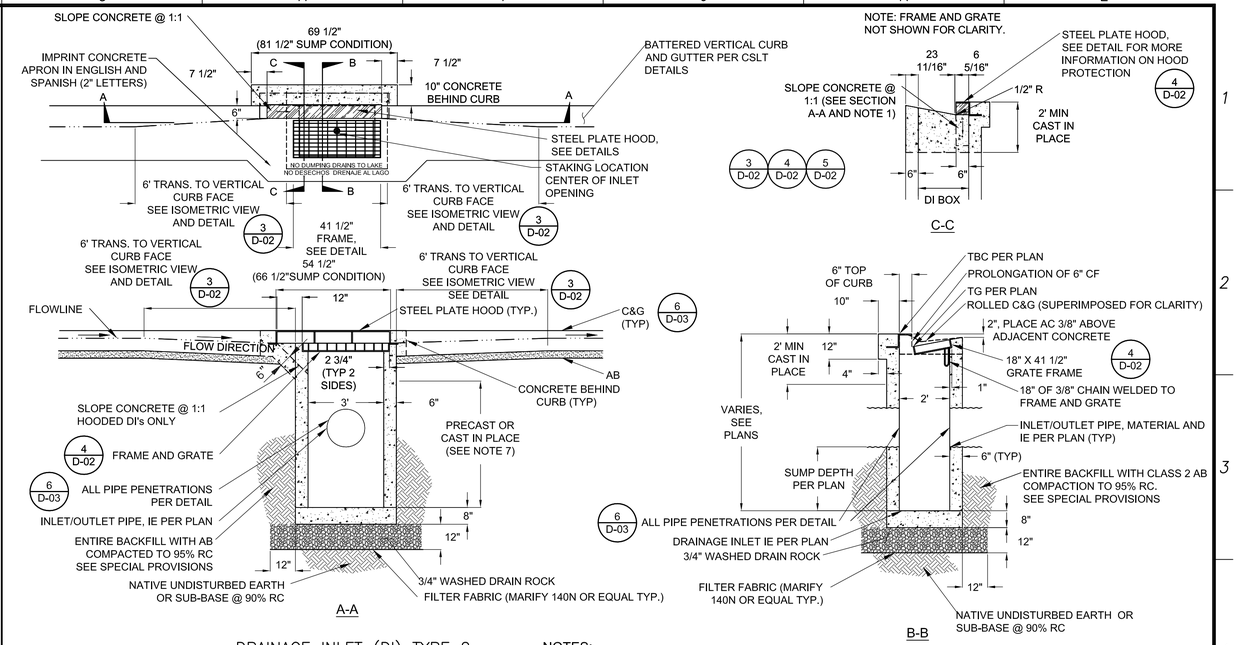

DRAINAGE INLET (DI) TYPE 2

DETAIL 2

NTS

NOTES:

1. HOODS SHALL BE INSTALLED FOR ALL DIs LOCATED WITHIN BATTERED CURB AND GUTTER SECTIONS. NO HOODS SHALL BE INSTALLED WHERE ROLLED CURB AND GUTTER IS SPECIFIED.
2. TYPE 18 GRATE SHALL BE USED FOR HOODED DIs AND TYPE 24 GRATES SHALL BE USED FOR NON-HOODED DIs.
3. MATCH ADJACENT CURB TYPE FOR NON-HOODED DIs.
4. SEE DETAIL 6 THIS SHEET FOR NON-HOODED DIs.

DRAINAGE INLET NOTES:

1. THE 1:1 SLOPED CONCRETE SECTION IS TO BE POSITIONED ON THE UP SLOPE SIDE OF THE DRAINAGE INLET. AT SAG LOCATIONS THE 1:1 SLOPED CONCRETE SECTION SHALL BE ON BOTH SIDES OF THE DRAINAGE INLET. NOT USED FOR NON-HOODED DRAINAGE INLETS.
2. DEPRESS GUTTER FLOWLINE FROM 3 5/8" TO 6", AS MEASURED FROM TBC, PER 6' CURB TRANSITION DETAIL.
3. FRAME AND GRATE SHALL CONFORM TO THE FRAME AND GRATE DETAIL ON THE PLANS, D&L I-3542, OR EQUAL.
4. DRAINAGE INLET HOOD SHALL BE 1/2" MINIMUM THICKNESS STEEL PLATE.
5. WALL REINFORCING (NOT SHOWN) SHALL BE #4 BARS @ 18" OC EACH WAY, PLACED 1 1/2" CLEAR FROM INSIDE OF BOX. INLET BOTTOM REINFORCING NOT REQUIRED EXCEPT AS NOTED IN NOTE 3, ABOVE.
6. A PRECAST UNIT WITH CAST-IN-PLACE TOP SECTION TO RECEIVE GRATE, FRAME AND HOOD WILL BE AN ACCEPTABLE ALTERNATIVE TO CAST-IN-PLACE UNITS. DRAINAGE INLETS THAT ARE ENTIRELY PRECAST ARE NOT ACCEPTABLE. CAST-IN-PLACE TOP SECTIONS SHALL BE DOWLED INTO THE CURB AND GUTTER WITH 3-#4 BARS, 18" LONG, ON EACH SIDE OF DRAINAGE INLET.
7. TOP 2' OF DI SHALL BE CAST IN PLACE. NO PRE-CAST DI TOP SECTION ARE ALLOWED.

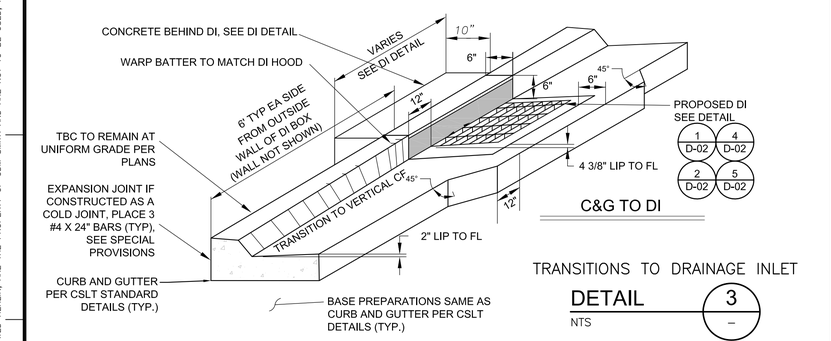

TRANSITIONS TO DRAINAGE INLET

DETAIL 3

NTS

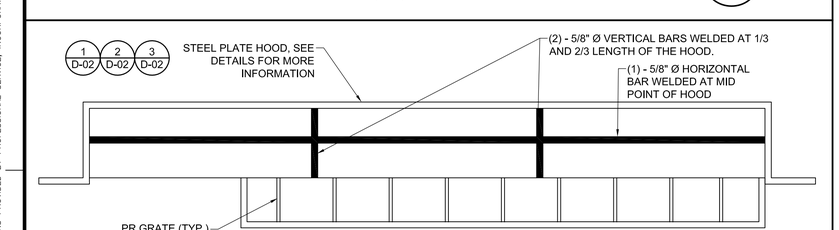

STEEL HOOD PROTECTION

DETAIL 4

NTS

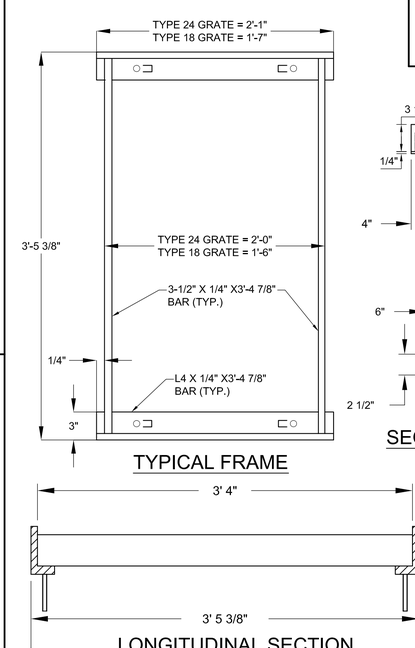

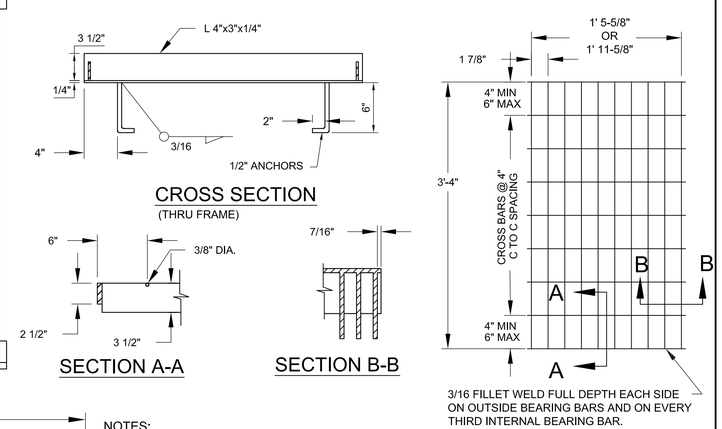

NOTES:

1. TYPE 24-13 OR TYPE 18 GRATE (WELDED STEEL) BEARING BARS TO BE 3-1/2" X 1/4" BARS ON 1-7/8" CENTERS. 3/8" DIA.
2. CROSS BARS MAY BE FILLET WELDED RESISTANCE WELDED OR ELECTROFORGED TO BEARING BARS.
3. WEIGHT OF 24" GRATE = 141 LBS.
4. ALL STEEL COMPONENTS SHALL BE HOT-DIP GALVANIZED AFTER FABRICATION.
5. ALL GRATES SHALL BE BICYCLE PROOF.

FRAME AND GRATE

DETAIL 5

NTS

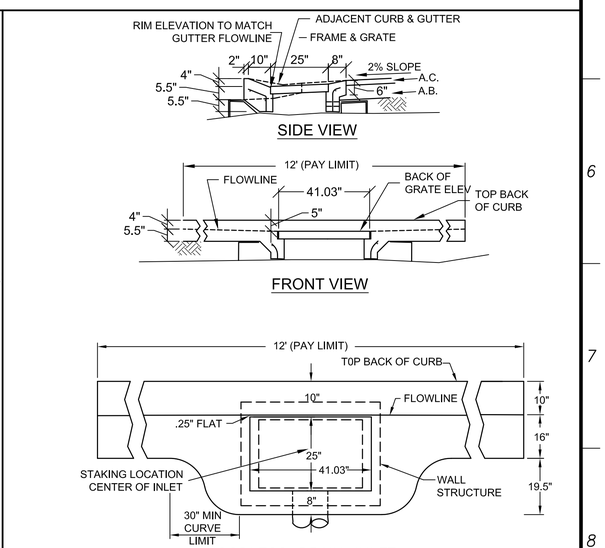

DETAIL 6

NTS

100% BID SET

REV	DATE	DESCRIPTION	BY

WARNING

0 1/2" 1"

IF THIS BAR SCALE DOES NOT MEASURE 1" THIS DWG HAS BEEN REDUCED SCALE ACCORDINGLY

CITY OF SOUTH LAKE TAHOE

DEPARTMENT OF PUBLIC WORKS

1052 TATA LANE
SOUTH LAKE TAHOE, CA 96150
Ph: (530) 542-6030 Fax: (541-7524

REGISTERED PROFESSIONAL ENGINEER No. C80207 Exp. 09/30/16 CIVIL STATE OF CALIFORNIA

CDM Smith

12313 Soaring Way, Suite 2-D
Truckee, California 96161
Tel (530) 582-7235
Fax (530) 582-1098

DESIGNED BY: RHV
DRAWN BY: OMN
SHEET CHK'D BY: RHV
CROSS CHK'D BY: SLS
DATE: MAY 8, 2015

SIERRA TRACT PH 3 & 4 EROSION CONTROL PROJECT

SHEET TITLE

CIVIL DETAILS 2

JOB NO. 27497-93981
SCALE: AS NOTED
SHEET 48 OF 57
DWG. NO: D-02

© 2012 CDM SMITH ALL RIGHTS RESERVED.
REUSE OF DOCUMENTS: THESE DOCUMENTS AND DESIGNS PROVIDED BY PROFESSIONAL SERVICE, INCORPORATED HEREIN, ARE THE PROPERTY OF CDM SMITH AND ARE NOT TO BE USED, IN WHOLE OR PART, FOR ANY OTHER PROJECT WITHOUT THE WRITTEN AUTHORIZATION OF CDM SMITH.

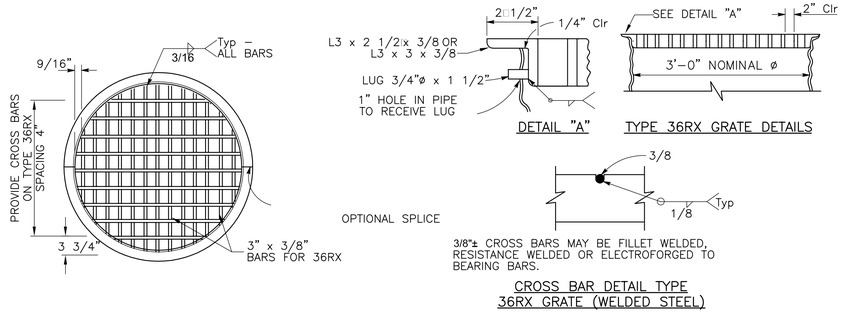

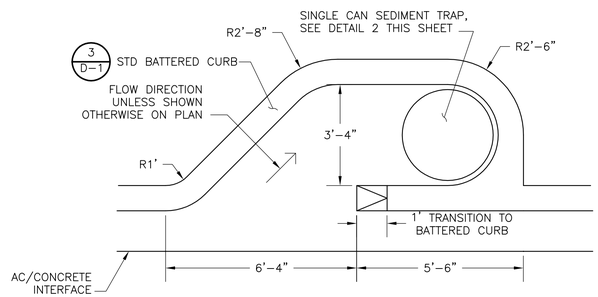

NOTES:
1. ALL STEEL COMPONENTS SHALL BE HOT–DIP GALVANIZED AFTER FABRICATION.
2. ALL GRATES SHALL BE BICYCLE PROOF.

SEDIMENT TRAP CURB TRANSITION AND GRATE

DETAIL 1 (NTS)

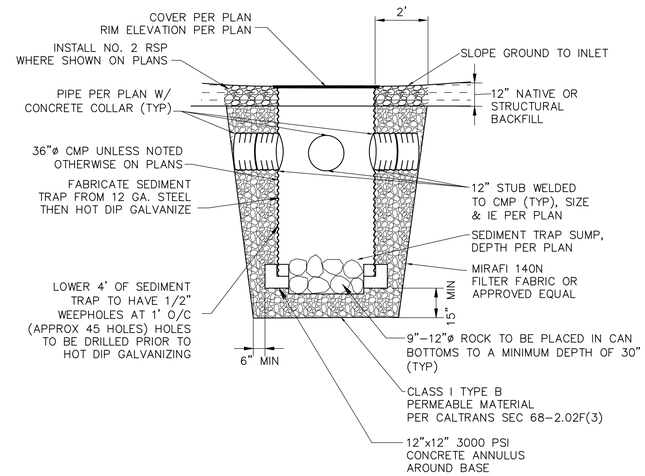

NOTES:
1. ALL SEDIMENT TRAPS ARE 3' DIAMETER UNLESS OTHERWISE NOTED ON PLANS.
2. GRATE OR RIM ELEVATION MAY BE FIELD ADJUSTED AFTER STAKEOUT. CONTRACTOR SHOULD NOT ORDER PREFABRICATED COMPONENTS UNTIL RIM AND PIPE ELEVATIONS ARE FIELD VERIFIED.
3. GRATES SHALL BE BICYCLE PROOF AND CONFORM WITH CALTRANS TYPE 36RX PER DETAIL 1 THIS SHEET.
4. SEDIMENT TRAPS SHOWN BELOW EXISTING GRADE IN PLANS SHALL HAVE GRATES. ALL OTHER SEDIMENT TRAPS SHALL HAVE HINGED LIDS.

SINGLE CAN SEDIMENT TRAP

DETAIL 2 (NTS)

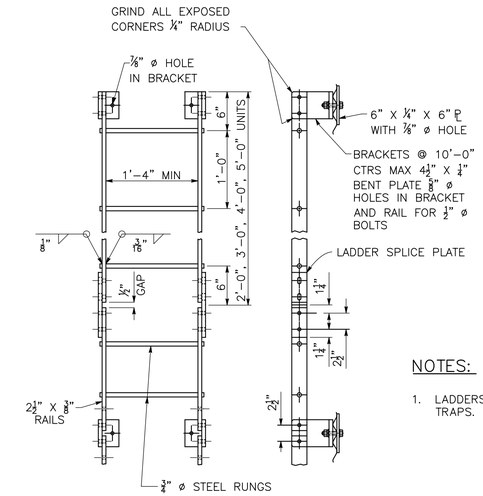

NOTES:
1. LADDERS SHALL BE INSTALLED IN ALL SEDIMENT TRAPS.

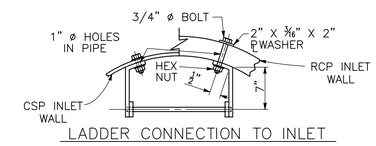

SEDIMENT TRAP LADDER

DETAIL 3 (NTS)

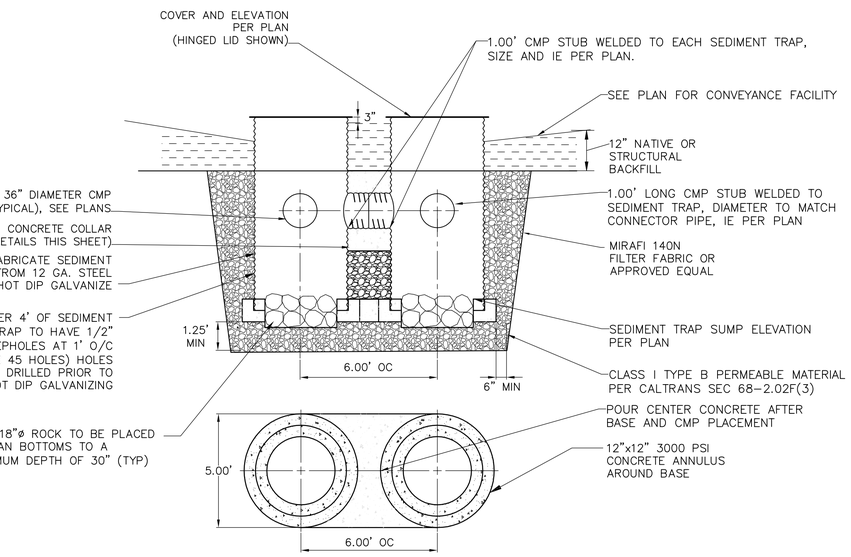

NOTES:
1. ALL SEDIMENT TRAPS ARE 3' DIAMETER UNLESS OTHERWISE NOTED ON PLANS.
2. GRATE OR RIM ELEVATION MAY BE FIELD ADJUSTED AFTER STAKEOUT. CONTRACTOR SHOULD NOT ORDER PREFABRICATED COMPONENTS UNTIL RIM AND PIPE ELEVATIONS ARE FIELD VERIFIED.
3. GRATES SHALL BE BICYCLE PROOF AND CONFORM WITH CALTRANS TYPE 36RX PER DETAIL 1 THIS SHEET.

DOUBLE CAN SEDIMENT TRAP

DETAIL 4 (NTS)

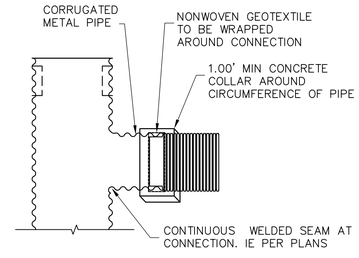

NOTES:
1. AREA UNDER CONNECTION MUST BE OVER–EXCAVATED TO ALLOW AMPLE WORK AREA TO WRAP NON–WOVEN GEOTEXTILE.
2. NON–WOVEN GEOTEXTILE TO BE WRAPPED AROUND CONNECTION WITH FULL SEAM OVERLAP TO PROVIDE FULL PROTECTION FROM SOIL INTRUSION.
3. CONCRETE ENCASEMENT TO BE CAST IN PLACE AROUND CONNECTION.
4. CONNECTION AND PIPE TO BE BACKFILLED PER ASTM D2321.
5. SEE DETAIL 6 THIS SHEET FOR CONCRETE COLLAR DIMENSIONS

SEDIMENT CAN/HDPE PIPE CONNECTION

DETAIL 5 (NTS)

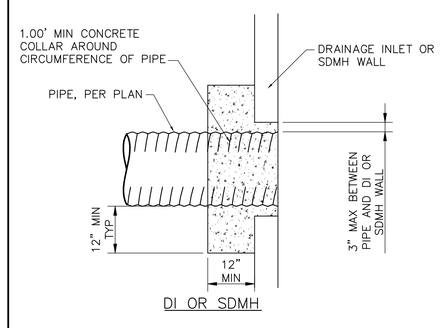

CONCRETE COLLAR

DETAIL 6 (NTS)

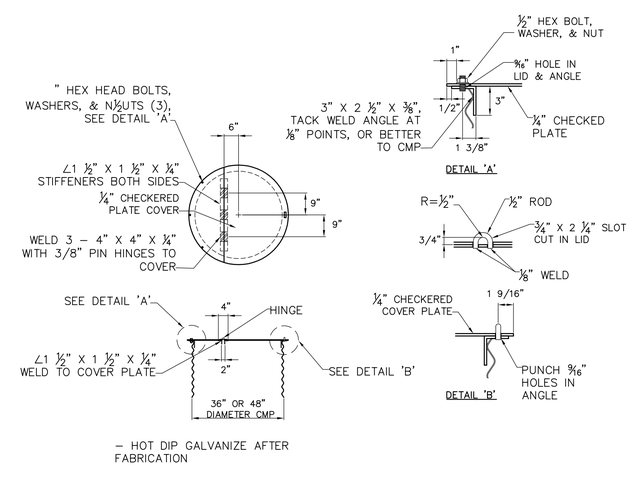

HINGED LID

DETAIL 7 (NTS)

100% BID SET

REV	DATE	DESCRIPTION	BY

WARNING: 0 1/2" 1" — IF THIS BAR SCALE DOES NOT MEASURE 1" THIS DWG HAS BEEN REDUCED SCALE ACCORDINGLY

CITY OF SOUTH LAKE TAHOE
DEPARTMENT OF PUBLIC WORKS
1052 TATA LANE
SOUTH LAKE TAHOE, CA 96150
Ph: (530) 542-6030 Fax: (541-7524

REGISTERED PROFESSIONAL ENGINEER No. C80207 Exp. 09/30/16 CIVIL STATE OF CALIFORNIA

CDM Smith
12313 Soaring Way, Suite 2-D
Truckee, California 96161
Tel (530) 582-7235
Fax (530) 582-1098

DESIGNED BY: RHV
DRAWN BY: OMN
SHEET CHK'D BY: RHV
CROSS CHK'D BY: SLS
DATE: FEBRUARY 20, 2015

SIERRA TRACT PH 3 & 4 EROSION CONTROL PROJECT
SHEET TITLE
CIVIL DETAILS 3

JOB NO. 27497–93981
SCALE: AS NOTED
SHEET 49 OF 57
DWG. NO: D-03

© 2012 CDM SMITH ALL RIGHTS RESERVED.
REUSE OF DOCUMENTS: THESE DOCUMENTS AND DESIGNS PROVIDED BY PROFESSIONAL SERVICE, INCORPORATED HEREIN, ARE THE PROPERTY OF CDM SMITH AND ARE NOT TO BE USED, IN WHOLE OR PART, FOR ANY OTHER PROJECT WITHOUT THE WRITTEN AUTHORIZATION OF CDM SMITH.

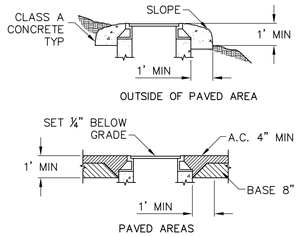

MANHOLE FRAME AND COVER FINISHES

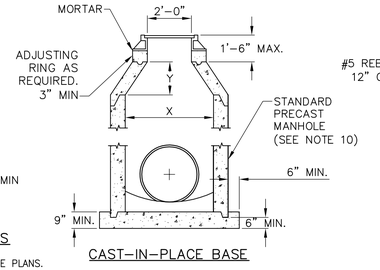

CAST-IN-PLACE BASE

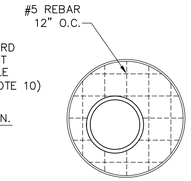

FLAT SLAB TOP

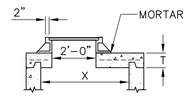

FLAT SLAB

FLAT SLAB SHALL BE USED WHEN DEPTH OR SHALLOW PIPE CONNECTIONS DO NOT PERMIT USE OF TAPER UNIT

TABLE OF DIMENSIONS				MAX PIPE
M.H.	X	Y	T MIN	INNER DIA
48"	48"	18"	8"	30"
60"	60"	30"	9"	42"
72"	72"	42"	10"	54"

NOTES:

1. ECCENTRIC CONES SHALL BE USED WHEN SPECIFIED ON THE PLANS.
2. JOINTS MAY BE EITHER KEYED OR TONGUE AND GROVE.
3. RISER SECTIONS, CONES, AND ADJUSTING RINGS SHALL CONFORM TO ASTM DESIGNATION C-478.
4. FRAME SHALL BE SECURED TO RISER OR FLAT SLAB TOP WITH MORTAR CEMENT.
5. DIMENSION "Y" IS A MINIMUM DIMENSION AND MAY BE GREATER IF DEPTH PERMITS.
6. MANHOLE FLOORS SHALL HAVE WOOD TROWEL FINISH AND SLOPE FROM ALL DIRECTIONS TOWARD THE OUTLET.
7. COVER FOR STORM DRAINS SHALL BEAR THE LETTER "D" OR "SD".
8. EXTRA DEPTH MANHOLES OR MANHOLES WITH PIPES OVER 54 INCHES IN DIAMETER SHALL REQUIRE SPECIAL DESIGN.
9. THERE SHALL BE AN 8 INCH MINIMUM CLEAR DISTANCE BETWEEN ALL PIPE OUTSIDE DIAMETERS AT THE MANHOLE UNLESS SPECIFICALLY APPROVED BY THE ENGINEER.
10. CAST-IN-PLACE MANHOLE WALLS MAY BE APPROVED BY THE ENGINEER. ALL CAST-IN-PLACE MANHOLES MUST BE FORMED IN A CIRCULAR SHAPE CONSISTENT WITH THE DIAMETER SPECIFIED ON THE PLANS AND REQUIRED TO FIT UPPER PRECAST SECTIONS. MINIMUM WALL THICKNESS SHALL BE 8 INCHES. MAXIMUM HEIGHT OF THE CAST-IN-PLACE SHALL BE 60 INCHES (MEASURED FROM THE TOP OF THE MANHOLE). PRECAST RINGS SHALL BE SET WET OR REQUIRED KEY FORM SHALL BE INCLUDED IN THE FORM WORK TO ACCEPT THE PRECAST KEY. ALL CAST-IN-PLACE CONCRETE SHALL BE CONSOLIDATED BY AN ACCEPTABLE METHOD TO ENSURE VOIDS ARE REMOVED.
11. ANY VARIATIONS FROM THIS DETAIL OR SPECIAL MANHOLES AND JUNCTIONS BOXES WILL REQUIRE DESIGN REVIEW AND APPROVAL BY THE ENGINEER.
12. MANHOLES GREATER THAN 4-FEET IN DEPTH SHALL INCLUDE STEPS FOR MAINTENANCE ACCESS.

STORM DRAIN MANHOLE

DETAIL 1 / –

NTS

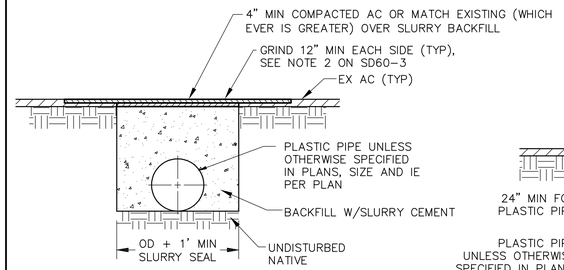

PIPE IN PAVEMENT MIN COVER

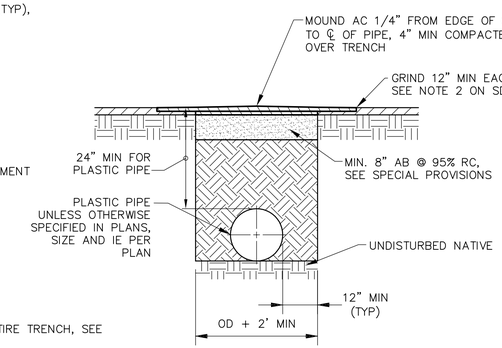

PIPE IN PAVEMENT

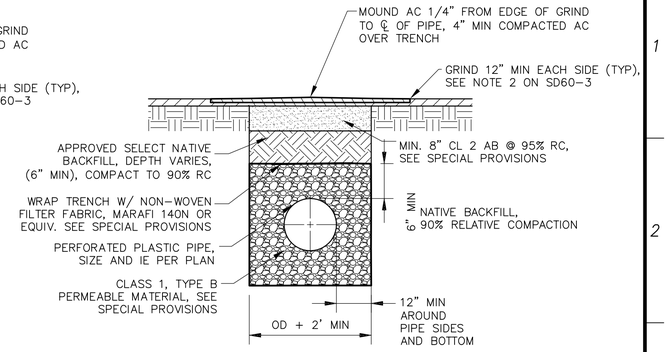

PERFORATED PIPE IN PAVEMENT

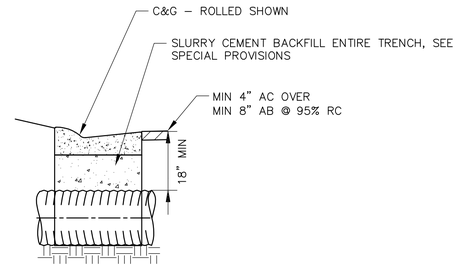

PIPE UNDER CONCRETE CURB

IN PAVEMENT PIPE TRENCH SECTIONS

DETAIL 2 / –

NTS

NOTES:

1. SEE CITY OF SOUTH LAKE TAHOE SD60-3 FOR PIPE TRENCH NOTES.
2. SEE DETAIL 9 ON SHEET D-01 FOR PERFORATION PATTERN.
3. ALL PIPE SHALL BE PLASTIC PER SSP 10-1.34 UNLESS OTHERWISE SPECIFIED ON PLANS.
4. PLASTIC PIPE WITH LESS THAN 24" COVER REQUIRES SLURRY CEMENT BACKFILL

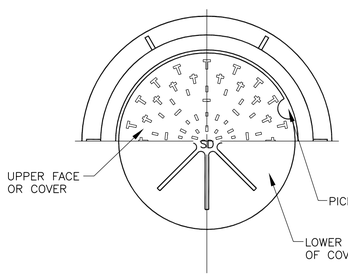

HALF PLAN OF MANHOLE FRAME & COVER

SD OR D = STORM DRAIN

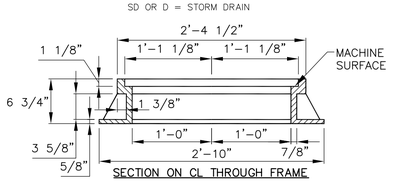

SECTION ON CL THROUGH FRAME

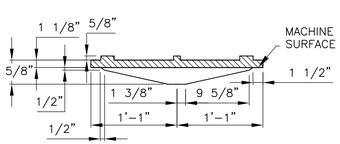

SECTION ON CL THROUGH COVER

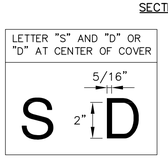

STORMDRAIN MANHOLE 24" FRAME AND COVER

DETAIL 3 / –

NTS

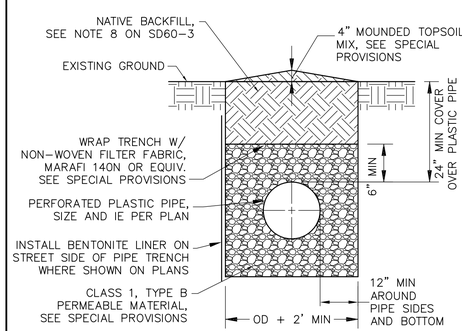

PERFORATED PIPE OUT OF PAVEMENT

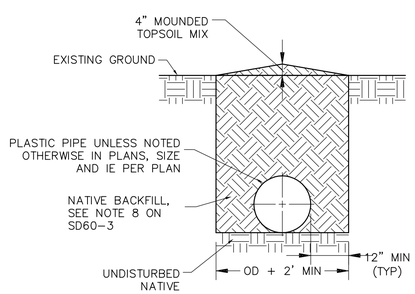

PIPE OUT OF PAVEMENT

NOTES:

1. SEE CITY OF SOUTH LAKE TAHOE SD60-3 FOR PIPE TRENCH NOTES.
2. SEE DETAIL 9 ON SHEET D-01 FOR PERFORATION PATTERN.

OUT OF PAVEMENT PIPE TRENCH SECTIONS

DETAIL 4 / –

NTS

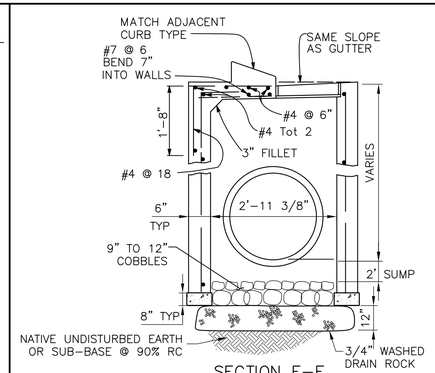

SECTION E-E

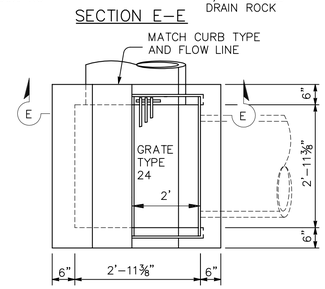

NOTES:

1. DRAIN INLET SHALL CONFORM TO CALTRANS TYPE G4 DRAIN INLET WITH GRATE TYPE 24 (STANDARD PLAN D73).
2. TOP 2' OF DRAIN INLET TO BE CAST IN PLACE WITH CURB AND GUTTER.
3. ALL GRATES SHALL BE BICYCLE PROOF.

DRAINAGE INLET – TYPE G4

DETAIL 5 / –

NTS

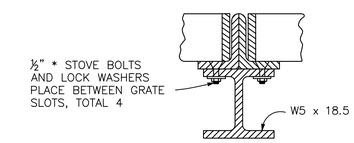

SECTION X-X

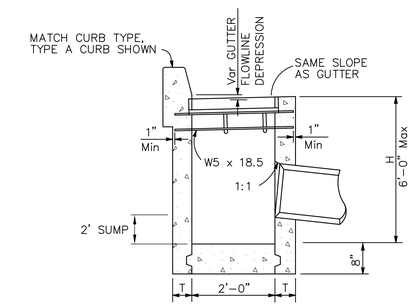

SECTION D-D

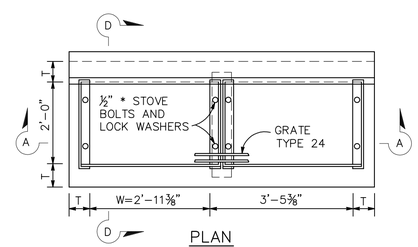

PLAN

TYPE GT3

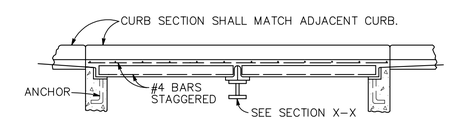

SECTION A-A

NOTES:

1. DRAIN INLET SHALL CONFORM TO CALTRANS TYPE GT3 DRAIN INLET PER STANDARD PLAN D74A.
2. TOP 2' OF CATCH BASIN TO BE CAST IN PLACE WITH CURB AND GUTTER.
3. ALL GRATES SHALL BE BICYCLE PROOF.

DRAINAGE INLET – TYPE GT3

DETAIL 6 / –

NTS

100% BID SET

REV	DATE	DESCRIPTION	BY

WARNING

0 1/2" 1"

IF THIS BAR SCALE DOES NOT MEASURE 1" THIS DWG HAS BEEN REDUCED SCALE ACCORDINGLY

CITY OF SOUTH LAKE TAHOE

DEPARTMENT OF PUBLIC WORKS

1052 TATA LANE
SOUTH LAKE TAHOE, CA 96150
Ph: (530) 542-6030 Fax: (530) 541-7524

REGISTERED PROFESSIONAL ENGINEER — No. C80207 — Exp. 09/30/16 — CIVIL — STATE OF CALIFORNIA

CDM Smith

12313 Soaring Way, Suite 2-D
Truckee, California 96161
Tel (530) 582-7235
Fax (530) 582-1098

DESIGNED BY: RHV
DRAWN BY: OMN
SHEET CHK'D BY: RHV
CROSS CHK'D BY: SLS
DATE: FEBRUARY 20, 2015

SIERRA TRACT PH 3 & 4 EROSION CONTROL PROJECT

SHEET TITLE

CIVIL DETAILS 4

JOB NO. 27497-93981
SCALE: AS NOTED
SHEET 50 OF 57
DWG. NO: D-04

© 2012 CDM SMITH ALL RIGHTS RESERVED.
REUSE OF DOCUMENTS: THESE DOCUMENTS AND DESIGNS PROVIDED BY PROFESSIONAL SERVICE, INCORPORATED HEREIN, ARE THE PROPERTY OF CDM SMITH AND ARE NOT TO BE USED, IN WHOLE OR PART, FOR ANY OTHER PROJECT WITHOUT THE WRITTEN AUTHORIZATION OF CDM SMITH.

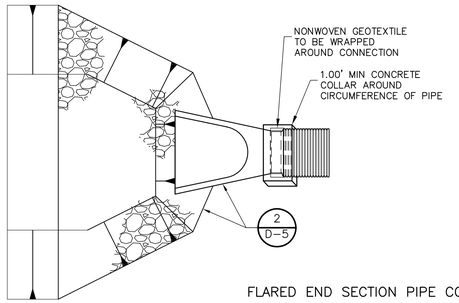

NOTES:

1. AREA UNDER CONNECTION MUST BE OVER-EXCAVATED TO ALLOW AMPLE WORK AREA TO WRAP NON-WOVEN GEOTEXTILE.
2. NON-WOVEN GEOTEXTILE TO BE WRAPPED AROUND CONNECTION WITH FULL SEAM OVERLAP TO PROVIDE FULL PROTECTION FROM SOIL INTRUSION.
3. CONCRETE ENCASEMENT TO BE CAST IN PLACE AROUND CONNECTION.
4. CONNECTION AND PIPE TO BE BACKFILLED PER ASTM D2321.
5. ALL SD EXPOSED TO SUN SHALL BE RCP.

FLARED END SECTION PIPE CONNECTION

DETAIL 1
NTS

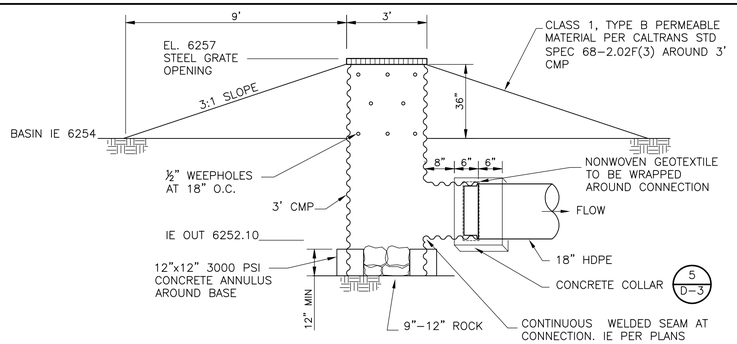

NOTES:

1. UPPER 36" OF CMP TO HAVE 3 ROWS OF ½" WEEP HOLES AT 18" O.C. (APPROX. 18 WEEP HOLES).
2. FIRST ROW OF WEEP HOLES SHALL BE 3" OFF THE BASIN INVERT (EL 6254.25).
3. STEEL GRATE TO BE CALTRANS STD. PLAN D75A TYPE GMP.
4. AREA UNDER CONNECTION MUST BE OVER EXCAVATED TO ALLOW AMPLE WORK AREA TO WARP NON-WOVEN GEOTEXTILE.
5. NON-WOVEN GEOTEXTILE TO BE WRAPPED AROUND CONNECTION WITH FULL SEAM OVERLAP TO PROVIDE FULL PROTECTION FROM SOIL INTRUSION.
6. CONCRETE ENCASEMENT TO BE CAST-IN-PLACE AROUND CONNECTION.
7. CONNECTION AND PIPE TO BE BACKFILLED PER ASTM D2321.

BASIN OUTLET STRUCTURE

DETAIL 3
NTS

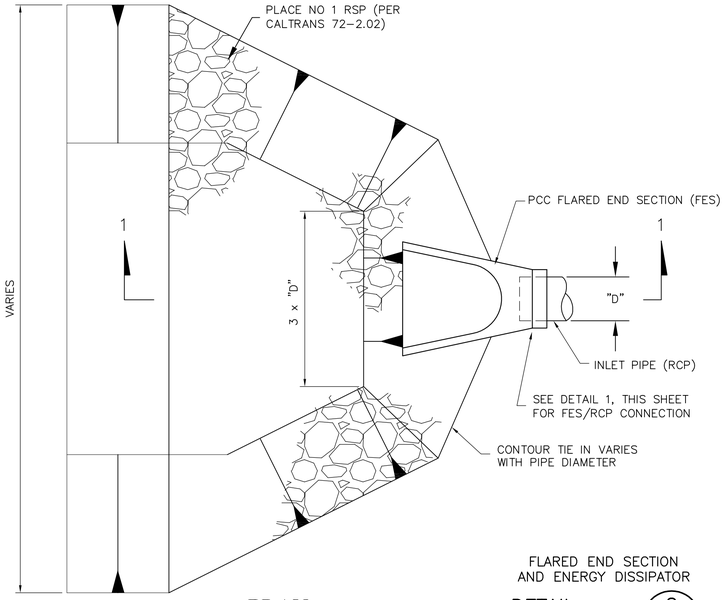

NOTES:

1. ALL FLARED END SECTIONS SHALL INCLUDE TRASH RACKS IF PIPE DIAMETER EXCEEDS 18", REFER TO SSP 10-1.37.
2. ONE FULL LENGTH OF RCP SHALL BE INSTALLED WITH FES WHERE SD PIPE WILL BE EXPOSED TO SUNLIGHT.

PLAN

FLARED END SECTION AND ENERGY DISSIPATOR

DETAIL 2
NTS

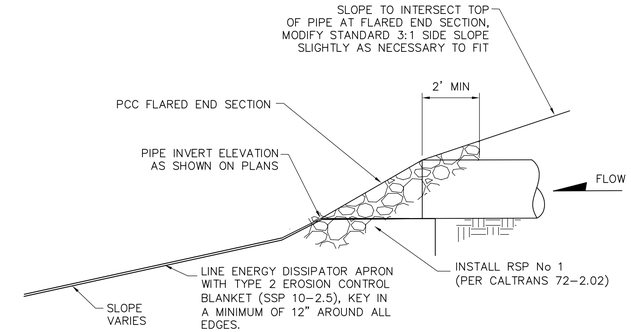

SECTION 1-1

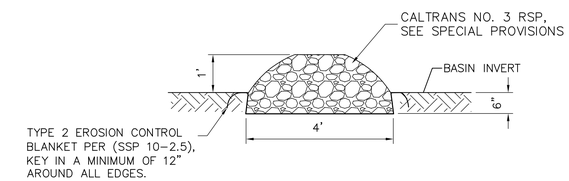

ROCK CHECK DAM

DETAIL 5
NTS

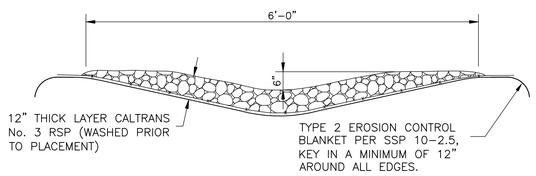

NOTES:

1. INSTALL REVEGETATION TREATMENT TYPE 2 BENEATH CRUSHED ROCK AND AS SHOWN ON PLANS.

LOW FLOW CHANNEL

DETAIL 6

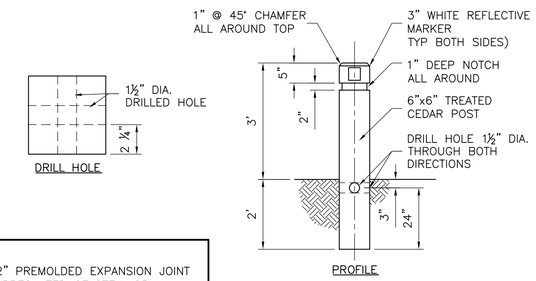

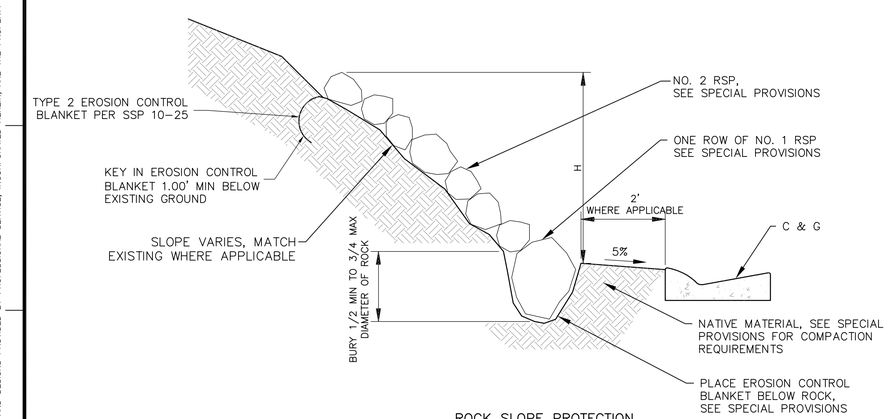

ROCK SLOPE PROTECTION

DETAIL 4
NTS

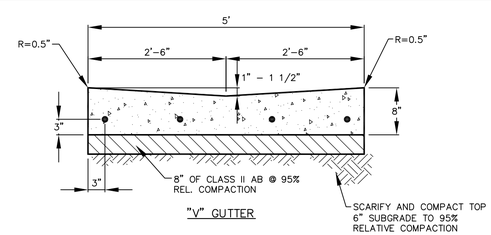

"V" GUTTER

NOTES:

1. STRUCTURAL THICKNESSES ARE MINIMUM. INCREASED SECTIONS MAY BE REQUIRED BASED ON ACTUAL SOIL CONDITIONS.
2. LOCATE 0.5 INCH THICK TRANSVERSE EXPANSION JOINTS OF APPROVED TYPE IN VALLEY GUTTER AT 18 FOOT INTERVALS AT ALL CURB RETURNS, COLD JOINTS AND OTHER TRANSITION POINTS. WEAKENED PLANE JOINTS SHALL BE INSTALLED WITH A CONCRETE TOOL AT 6-FT INTERVALS, 1.5 INCHES. DEEP. ALL EDGES OF JOINTS SHALL BE ROUNDED.
3. ALL CONCRETE TO BE CLASS "A" AND CEMENT CONTENT SHALL BE NO LESS THAN 658 LBS PER CUBIC FOOT.

VALLEY GUTTER

DETAIL 7
NTS

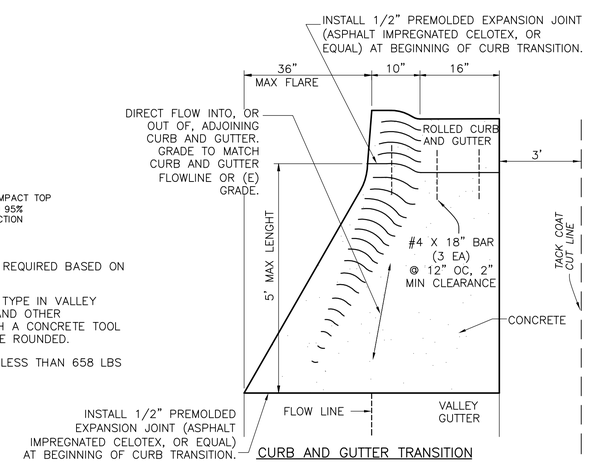

CURB AND GUTTER TRANSITION

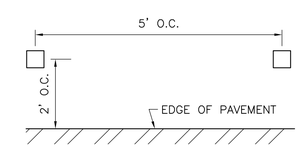

PLAN

PARKING BARRIER

DETAIL 8
NTS

100% BID SET

REV	DATE	DESCRIPTION	BY

WARNING
0 1/2" 1"
IF THIS BAR SCALE DOES NOT MEASURE 1" THIS DWG HAS BEEN REDUCED SCALE ACCORDINGLY

CITY OF SOUTH LAKE TAHOE
DEPARTMENT OF PUBLIC WORKS
1052 TATA LANE
SOUTH LAKE TAHOE, CA 96150
Ph: (530) 542-6030 Fax: (530) 541-7524

REGISTERED PROFESSIONAL ENGINEER No. C80207 Exp. 09/30/16 CIVIL STATE OF CALIFORNIA

CDM Smith
12313 Soaring Way, Suite 2-D
Truckee, California 96161
Tel (530) 582-7235
Fax (530) 582-1098

DESIGNED BY: RHV
DRAWN BY: OMN
SHEET CHK'D BY: RHV
CROSS CHK'D BY: SLS
DATE: FEBRUARY 20, 2015

SIERRA TRACT PH 3 & 4 EROSION CONTROL PROJECT
SHEET TITLE
CIVIL DETAILS 5

JOB NO. 27497-93981
SCALE: AS NOTED
SHEET 51 OF 57
DWG. NO: D-05

© 2012 CDM SMITH ALL RIGHTS RESERVED.
REUSE OF DOCUMENTS: THESE DOCUMENTS AND DESIGNS PROVIDED BY PROFESSIONAL SERVICE, INCORPORATED HEREIN, ARE THE PROPERTY OF CDM SMITH AND ARE NOT TO BE USED, IN WHOLE OR PART, FOR ANY OTHER PROJECT WITHOUT THE WRITTEN AUTHORIZATION OF CDM SMITH.

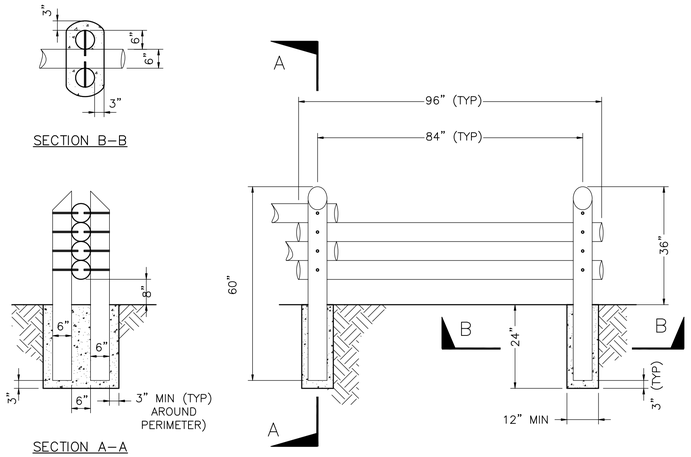

NOTE:

COUNTERSINK 3/8" X 8" LONG LAG SCREW & WASHER 1" DEEP WITH 1" BIT.

PEELERCORE FENCE

DETAIL 1 – NTS

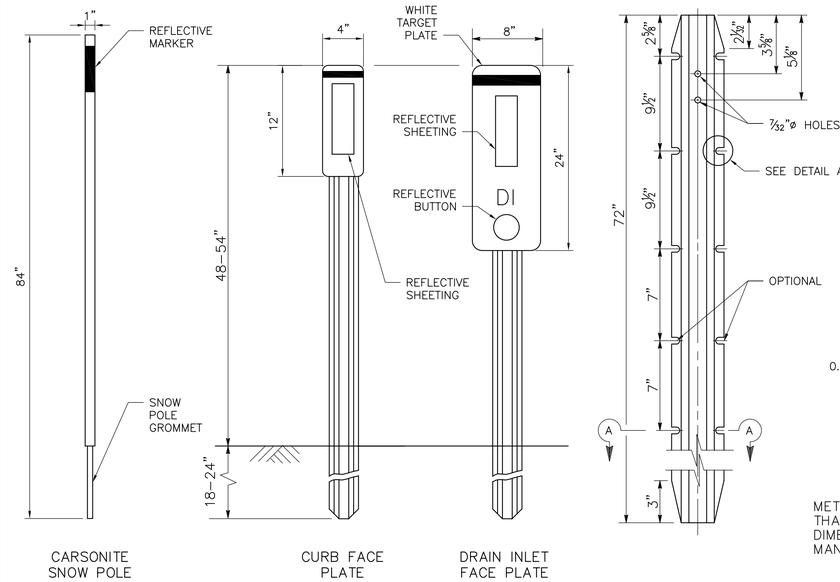

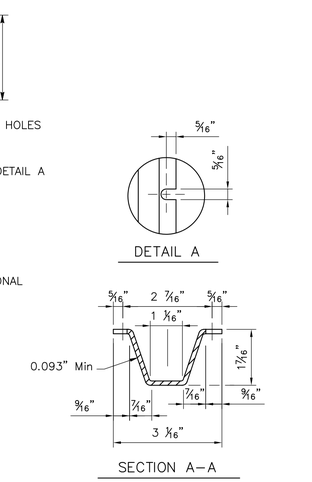

METAL POST TO BE AS SHOWN EXCEPT THAT MINOR VARIATIONS IN DESIGN AND DIMENSIONS WILL BE PERMITTED TO MEET MANUFACTURER'S STANDARDS.

TYPE L–1 (CA)

METAL POST DETAIL

NOTE:

REFER TO SPECIAL PROVISIONS FOR GUIDANCE ON SNOW POLE MARKING AND COLORING.

SNOW POLE DETAIL

DETAIL 2 – NTS

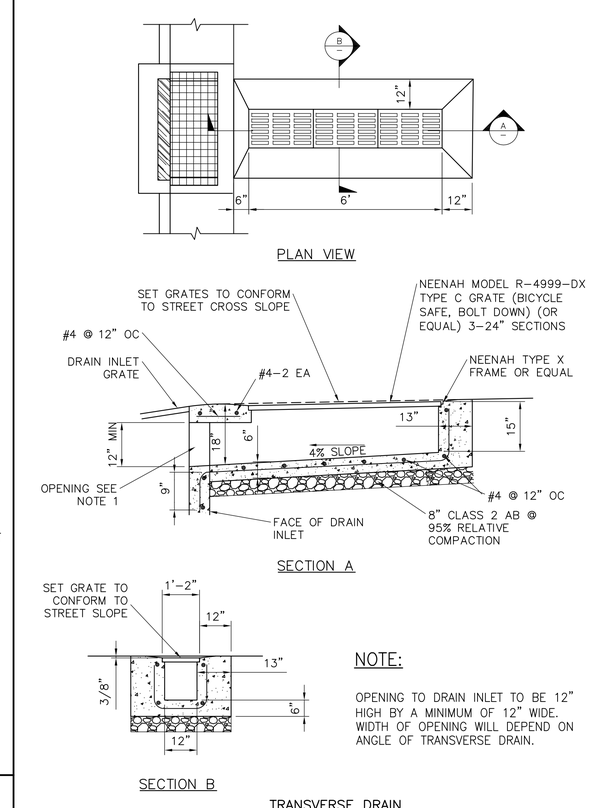

NOTE:

OPENING TO DRAIN INLET TO BE 12" HIGH BY A MINIMUM OF 12" WIDE. WIDTH OF OPENING WILL DEPEND ON ANGLE OF TRANSVERSE DRAIN.

TRANSVERSE DRAIN

DETAIL 3 – NTS

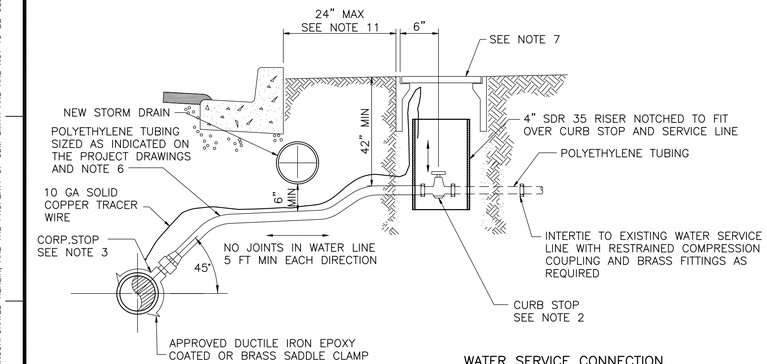

WATER SERVICE CONNECTION

DETAIL 4 – NTS

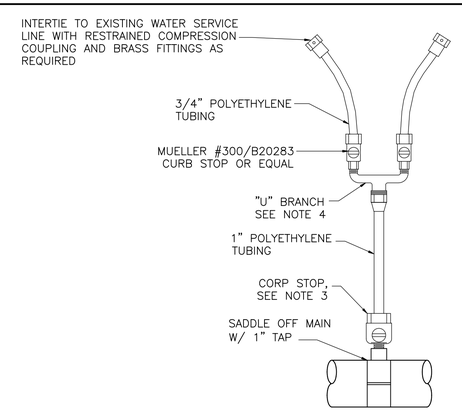

DOUBLE SERVICE

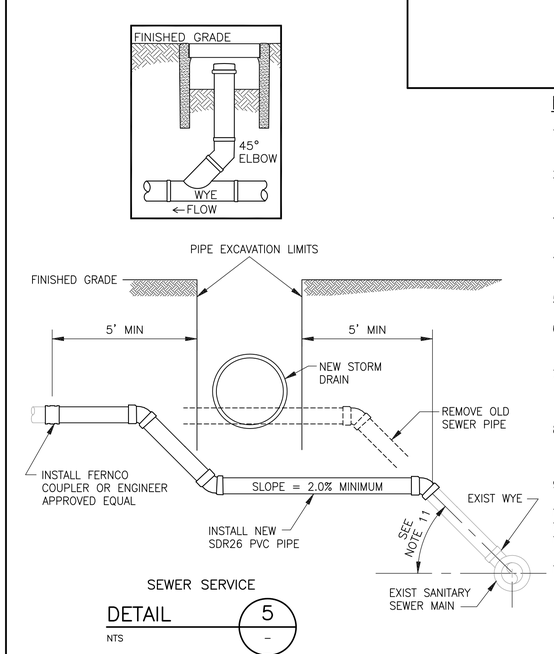

SEWER SERVICE

DETAIL 5 – NTS

NOTES:

1) ALL SERVICE CONNECTIONS SHALL CONFORM TO AWWA C–800–84 AND BE INSTALLED FROM THE NEW MAIN TO EACH EXISTING SERVICE LINE.
2) NEW CURB–STOP SHALL BE SIZED AS INDICATED ON PLANS AND BE MUELLER #300/B20283 OR APPROVED EQUAL.
3) CORPORATION STOP SHALL BE SIZED AS INDICATED ON PLANS AND BE MUELLER #300/B20013 OR APPROVED EQUAL FOR 3/4" TO 1" USE MUELLER #300/2969 OR APPROVED EQUAL FOR 1 1/2" TO 2".
4) SINGLE HOUSE SERVICE SHALL BE 3/4" POLYETHYLENE WITH 3/4" FITTINGS. DOUBLE HOUSE SERVICE SHALL BE 1" POLYETHYLENE TO FORD #U68–43 SPACING "U" BRANCH OR EQUAL WITH TWO 3/4" CURB–STOPS AND SERVICE CONNECTIONS.
5) ALL WATER SERVICES SHALL HAVE A HAND–TAMPED SAND BEDDING NINE INCHES (9") ABOVE AND BENEATH THE TUBING AND SHALL HAVE SIX INCHES (6") MINIMUM CLEARANCE ON EACH SIDE.
6) ALL WATER SERVICE SHALL BE POLYETHYLENE 200 PSI CLASS IRON PIPE SIZE FOR 3/4" TO 1". COPPER TUBE SIZE FOR 1 1/2" TO 2". PIPE STIFFENER INSERTS TO BE USED AT ALL CONNECTIONS.
7) WATER VALVE BOX SHALL BE CHRISTY G5 FOR SINGLE SERVICE, AND CHRISTY B9 FOR DOUBLE SERVICE OR APPROVED EQUAL WITH A METAL LID MARKED "WATER". WATER VALVE BOX PLACED IN DIRT TRAFFIC OR PARKING AREAS SHALL HAVE A CONCRETE COLLAR INSTALLED. COLLAR SHALL BE A MINIMUM OF SIX INCHES (6") WIDE AND SIX INCHES (6") DEEP, CONCRETE SHALL BE 3,000 PSI MIN. NO COLLAR REQUIRED IF BOX IS PLACED IN ASPHALT.
8) ALL CORP–STOPS, CURB–STOPS AND POLYETHYLENE SERVICE LINES SHALL BE DISINFECTED AND HYDROSTATIC TESTED ALONG WITH THE NEW MAIN PRIOR TO BEING PLACED INTO SERVICE.
9) ALL TUBING CONNECTIONS SHALL BE THE COMPRESSION TYPE; MUELLER OR APPROVED EQUAL.
10) 10 GA. SOLID COPPER TRACER WIRE SHALL BE INSTALLED FROM THE NEW MAIN ALONG NEW SERVICE LINE TO THE VALVE BOX REGARDLESS OF NEW WATER MAIN TYPE.
11) WATER SERVICE CONNECTIONS INSTALLED ON THE OPPOSITE SIDE OF THE STREET FROM WATER MAIN SHALL UTILIZE TRENCHLESS TECHNOLOGY (I.E. PNEUMATIC RAM OR MOLE) OR OTHER METHOD APPROVED BY DISTRICT ENGINEER.

NOTES:

1. WORK THAT RESULTS IN THE SHUT–DOWN OF A SEWER SERVICE SHALL BE PRECEDED BY A 48 HOUR NOTICE TO THE AFFECTED PROPERTY OWNER, STPUD & THE CITY BY THE CONTRACTOR.
2. REPLACEMENT MATERIAL FOR THE SEWER SERVICE SHALL BE PVC, SDR26 OR STRONGER PIPE OF THE SAME INSIDE DIAMETER AS THE EXISTING SEWER SERVICE.
3. THE SEWER SERVICE SHALL BE REPLACED A MINIMUM OF 5 FEET BEYOND THE TRENCH WALL THAT WAS CUT FOR CONSTRUCTION OF THE STORM DRAIN.
4. THE NEW SEWER SERVICE PIPE SHALL BE CONNECTED TO THE EXISTING SEWER SERVICE PIPE WITH A FERNCO COUPLER OR ENGINEER APPROVED EQUIVALENT.
5. FOR PVC. INSTALLATIONS, CONNECT TO EXISTING "BELL END" AND CONNECT OPPOSITE END WITH PVC TO PVC KNOCK ON SLEEVE.
6. CLEANOUT LOCATED IN OR WITHIN 3' OF TRAFFIC SHALL BE BOXED WITH CONCRETE BOX W/METAL LID MARKED "SEWER" (SEE DETAIL).
7. SOLIDLY TAMP BACKFILL AT LEAST ONE FOOT (1'–0") ABOVE TOP OF PIPE. SERVICES UNDER PAVED AREAS SHALL BE BACKFILLED TO THE SAME SPECIFICATIONS AS SHOWN ON PAVEMENT REPLACEMENT DETAIL.
8. CONTRACTOR SHALL MARK ON A CLEAN SET OF PLANS THE FINAL STATIONING OR DISTANCE AND DIRECTION FROM MANHOLE TO EACH SERVICE LATERAL AND GIVE TO ENGINEER FOR RECORD DRAWING PURPOSES.
9. ANY DEVIATION FROM THESE METHODS MUST BE APPROVED BY THE ENGINEER.
10. SERVICE LINE MATERIAL SHALL BE PVC, SDR–26.
11. SEWER SERVICE SLOPE TO BE 45° OFF CENTERLINE OF MAIN.
12. ALL RELOCATED SEWER SERVICES SHALL BE AIR–TESTED IN ACCORDANCE WITH STPUD SEWER SERVICE AIR–TESTING STANDARDS.
13. MINIMUM DEPTH UNDER TRAFFIC AREA SHALL BE 30", LESS THAN 30" MUST BE CAST IRON PIPE.

100% BID SET

REV	DATE	DESCRIPTION	BY

WARNING: 0 1/2" 1" — IF THIS BAR SCALE DOES NOT MEASURE 1" THIS DWG HAS BEEN REDUCED SCALE ACCORDINGLY

CITY OF SOUTH LAKE TAHOE
DEPARTMENT OF PUBLIC WORKS
1052 TATA LANE
SOUTH LAKE TAHOE, CA 96150
Ph: (530) 542-6030 Fax: (530) 541-7524

REGISTERED PROFESSIONAL ENGINEER — No. C80207 — Exp. 09/30/16 — CIVIL — STATE OF CALIFORNIA

CDM Smith
12313 Soaring Way, Suite 2-D
Truckee, California 96161
Tel (530) 582-7235
Fax (530) 582-1098

DESIGNED BY: RHV
DRAWN BY: OMN
SHEET CHK'D BY: RHV
CROSS CHK'D BY: SLS
DATE: MAY 8, 2015

SIERRA TRACT PH 3 & 4 EROSION CONTROL PROJECT
SHEET TITLE
CIVIL DETAILS 6

JOB NO. 27497–93981
SCALE: AS NOTED
SHEET 52 OF 57
DWG. NO: D-06

©2012 CDM SMITH ALL RIGHTS RESERVED.
REUSE OF DOCUMENTS: THESE DOCUMENTS AND DESIGNS PROVIDED BY PROFESSIONAL SERVICE, INCORPORATED HEREIN, ARE THE PROPERTY OF CDM SMITH AND ARE NOT TO BE USED, IN WHOLE OR PART, FOR ANY OTHER PROJECT WITHOUT THE WRITTEN AUTHORIZATION OF CDM SMITH.

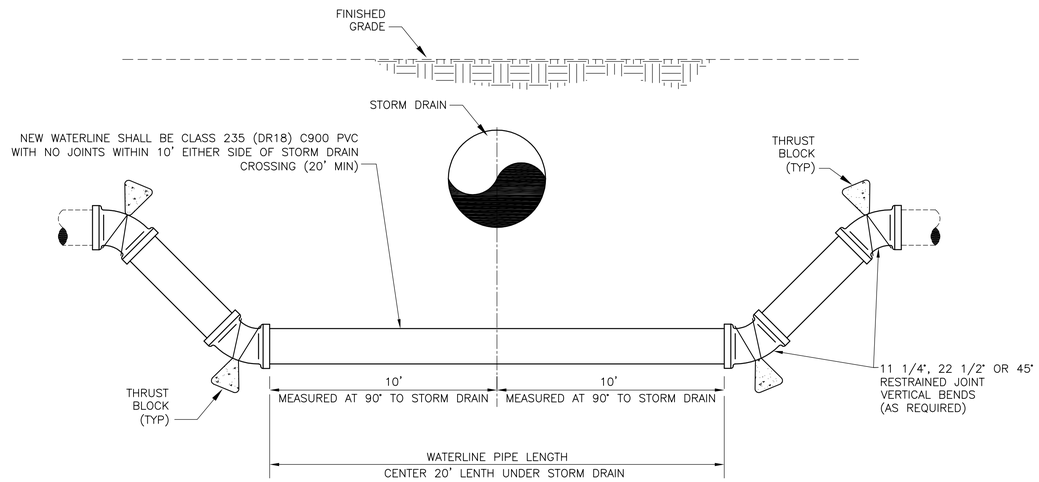

WATER MAIN RELOCATION DETAIL

DETAIL 1 / –

NTS

NOTES:

1. CUT ADJACENT PIPE SECTIONS AS REQUIRED TO CENTER FULL 20' WATERLINE PIPE LENGTH UNDER STORM DRAIN/SEWER.
2. CONCRETE FOR THRUST BLOCKS SHALL NOT INTERFERE WITH THE REMOVAL OF BOLTED ASSEMBLIES.
3. CONTRACTOR TO COORDINATE WITH S.T.U.P.D. DURING CONSTRUCTION OF CROSSING TO ENSURE COMPLIANCE WITH S.T.U.P.D. REQUIREMENTS.

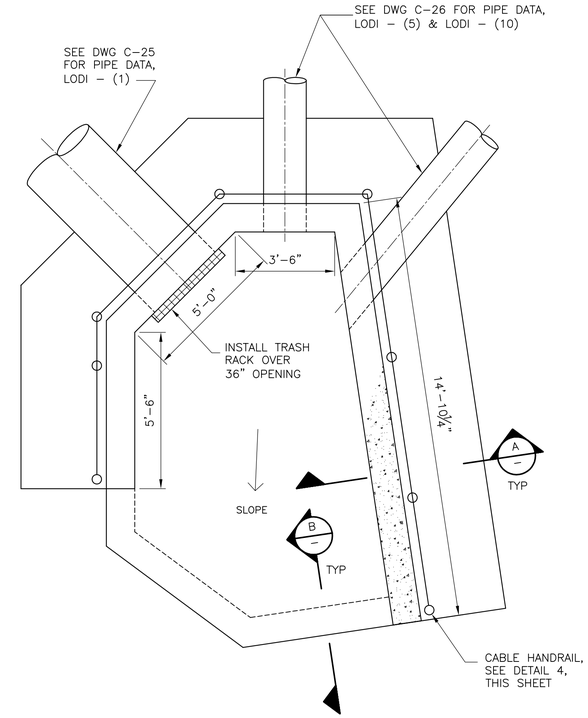

PLAN

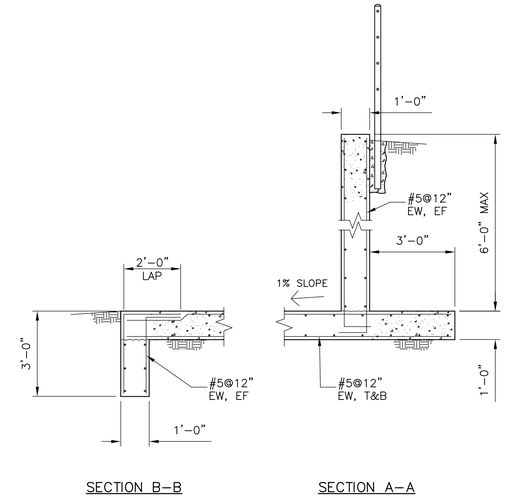

SECTION B–B

SECTION A–A

NOTES

1. SEE SHEET D-09 FOR STRUCTURAL DETAILS AND NOTES.
2. CONTRACTOR SHALL SUBMIT TRASH RACK SHOP DRAWINGS TO ENGINEER FOR APPROVAL

HEADWALL OUTLET STRUTURE

DETAIL 2 / –

NTS

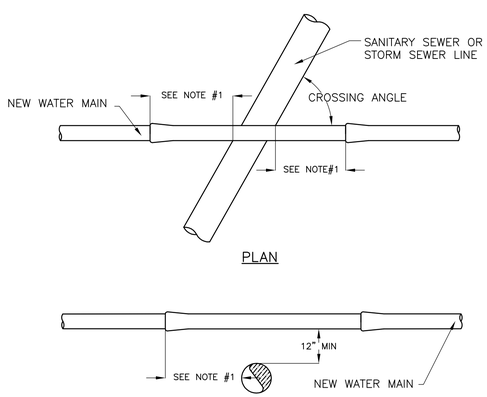

PLAN

WATER MAIN IS ABOVE SEWER OR STORM DRAIN

PROFILE

WATER MAIN PROTECTION AT SEWER CROSSING

DETAIL 3 / –

NTS

NOTES:

1. WHERE THE WATER MAIN IS CROSSING A SEWER LINE OR STORM DRAIN, THE CROSSING SHALL BE CONSTRUCTED IN SUCH A MANNER THAT:

A. THE WATER MAIN CROSSES AT LEAST 12" ABOVE THE SEWER MAIN OR STORM DRAIN, AND
B. THE CROSSING ANGLE IS NO LESS THAN 45 DEGREES,

2. IF SITE CONDITIONS DICTATE THAT THE WATER MAIN CROSSING CANNOT MEET ONE OR MORE OF THE CONDITIONS (OF NOTE #1), IT SHALL BE CONSTRUCTED IN THE FOLLOWING MANNER.

3. IF ANY OF THE CONDITIONS OF NOTE #2 CANNOT BE MET, THEN SPECIAL INSTRUCTIONS APPLY, AS SHOWN ON THE PLANS.
4. SPECIAL PIPE SHALL BE CONSTRUCTED OF CLASS 350 DIP OR CLASS 200 C900/C905 PVC MINIMUM PRESSURE RATING.

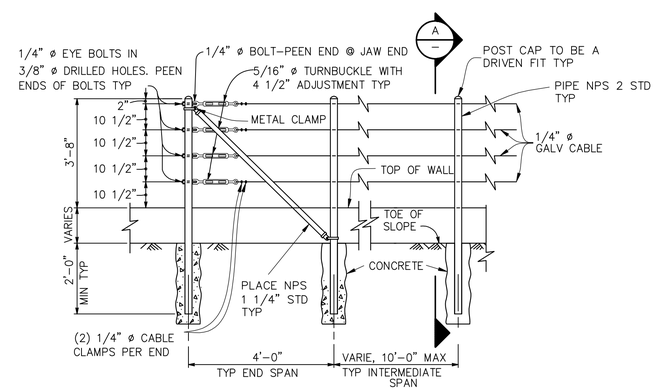

ELEVATION

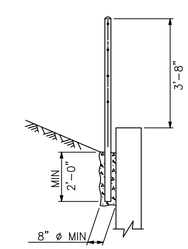

SECTION A–A

NOTES:

1. CABLE SHALL NOT BE SPLICED BETWEEN END POSTS.
2. POSTS TO BE VERTICAL.
3. ALIGNMENT OF HOLES IN POSTS MAY VARY TO CONFORM TO SLOPE OF TOP OF RETAINING WALL.
4. THE CONTRACTOR SHALL VERIFY ALL DEPENDENT DIMENSIONS IN THE FIELD BEFORE ORDERING OR FABRICATING ANY MATERIAL.
5. PROVIDE THIMBLES AT ALL CABLE LOOPS.

CABLE HANDRAIL

DETAIL 4 / –

NTS

100% BID SET

REV	DATE	DESCRIPTION	BY

WARNING
0 1/2" 1"
IF THIS BAR SCALE DOES NOT MEASURE 1" THIS DWG HAS BEEN REDUCED SCALE ACCORDINGLY

CITY OF SOUTH LAKE TAHOE
DEPARTMENT OF PUBLIC WORKS
1052 TATA LANE
SOUTH LAKE TAHOE, CA 96150
Ph: (530) 542-6030 Fax: (541-7524

REGISTERED PROFESSIONAL ENGINEER No. C80207 Exp. 09/30/16 CIVIL STATE OF CALIFORNIA

CDM Smith
12313 Soaring Way, Suite 2-D
Truckee, California 96161
Tel (530) 582-7235
Fax (530) 582-1098

DESIGNED BY: RHV
DRAWN BY: OMN
SHEET CHK'D BY: RHV
CROSS CHK'D BY: SLS
DATE: FEBRUARY 20, 2015

SIERRA TRACT PH 3 & 4 EROSION CONTROL PROJECT

SHEET TITLE

CIVIL DETAILS 7

JOB NO. 27497-93981
SCALE: AS NOTED
SHEET 53 OF 57
DWG. NO:
D-07

© 2012 CDM SMITH ALL RIGHTS RESERVED.
REUSE OF DOCUMENTS: THESE DOCUMENTS AND DESIGNS PROVIDED BY PROFESSIONAL SERVICE, INCORPORATED HEREIN, ARE THE PROPERTY OF CDM SMITH AND ARE NOT TO BE USED, IN WHOLE OR PART, FOR ANY OTHER PROJECT WITHOUT THE WRITTEN AUTHORIZATION OF CDM SMITH.

FITTING AND PIPE RESTRAINT LENGTH REQUIREMENTS

TYPE OF FITTING		90° ELBOW	45° ELBOW	22.5° ELBOW	11.25° ELBOW	TEE BRANCH*	TEE W/ PLUG	REDUCER**	VALVE INLINE	VALVE AT END	DEAD END
TYPICAL INSTALLATION		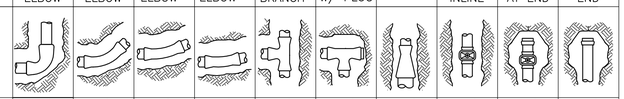									
SIZE OF PIPE	6" PVC	14'	6'	3'	2'	10'*	14'	41'	42'	42'	42'
	6" DIP	16'	7'	4'	2'	10'*	16'	61'	63'	63'	63'
	8" PVC	18'	8'	4'	2'	10'*	18'	41'	55'	55'	55'
	8" DIP	21'	9'	5'	2'	10'*	21'	62'	82'	82'	82'
	10" PVC	22'	6'	5'	3'	10'*	22'	43'	66'	66'	66'
	10" DIP	25'	10'	5'	3'	10'*	25'	63'	99'	99'	99'
	12" PVC	26'	11'	6'	3'	15'	26'	43'	78'	78'	78'
	12" DIP	29'	12'	6'	3'	23'	29'	64'	117'	117'	117'
	14" PVC	29'	12'	6'	3'	25'	29'	43'	90'	90'	90'
	14" DIP	33'	14'	7'	4'	39'	33'	64'	133'	133'	133'
	16" PVC	33'	14'	7'	4'	36'	33'	44'	101'	101'	101'
	16" DIP	36'	15'	8'	4'	55'	36'	65'	150'	150'	150'
	18" PVC	36'	15'	8'	4'	46'	36'	62'	112'	112'	112'
	18" DIP	40'	17'	8'	4'	71'	40'	92'	167'	167'	167'
	24" PVC	45'	19'	9'	4'	76'	45'	62'	144'	144'	144'
	24" DIP	51'	21'	10'	4'	116'	51'	92'	214'	214'	214'

* MINIMUM 10' RESTRAINED LENGTH ON EACH RUN ON BOTH SIDES OF BRANCH
** LENGTHS GIVEN ARE VALID FOR UP TO 4" INCREASE IN NOMINAL DIAMETER FROM SIZE SHOWN

NOTES:

1. ALL MINIMUM RESTRAINT LENGTH CALCULATIONS BASED ON MINIMUM 10' PIPE LENGTH'S. MINIMUM PIPE LENGTH'S FOR DUCTILE IRON PIPE FITTINGS BASED ON POLYETHYLENE ENCASEMENT.
2. NUTS AND BOLTS ON ALL MJ FITTINGS SHALL BE PAINTED WITH TWO COATS OF KOPPERS 505, TNEMEC 46-450', AMERON OR EQUAL, 15 MILS EACH COAT.
3. ALL FLANGES TO BE BURIED, COAT ENTIRE ASSEMBLY WITH PETROLATUM SATURATED FABRIC TAPE TAPE WRAP SYSTEM IN ACCORDANCE WITH SPECIFICATIONS.
4. CONCRETE THRUST BLOCKING MAY BE REQUIRED IN CONJUNCTION WITH MECHANICAL THRUST RESTRAINT SYSTEMS IF DETERMINED NECESSARY BY THE ENGINEER.
5. VALVES PLACED IN A RUN OF PIPE OR AT A DEAD END TO BE RESTRAINED PER DEAD END RESTRAINT LENGTHS.
6. ALL VALVE CLUSTERS (CROSS OR TEE) USE THE RESTRAINT LENGTHS FOR THE 90° ELBOW.

RESTRAINT LENGTH DETAIL

DETAIL 1 / -

NTS

THRUST BLOCK AREA REQUIRED - SQUARE FEET

TYPE OF FITTING		90° ELBOW	45° ELBOW	22.5° ELBOW	11.25° ELBOW	TEE BRANCH	TEE W/ PLUG	CROSS W/ PLUG	CROSS W/ PLUGS
TYPICAL INSTALLATION		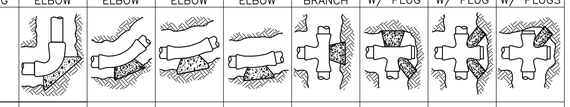							
SIZE OF PIPE	6"	4	4	2	2	4	4	4	4
	8"	10	6	3	3	10	10	10	10
	10"	12	8	4	4	15	15	15	15
	12"	16	10	6	6	20	20	20	20
	14"	21	12	6	6	22	21	22	21
	16"	27	15	8	8	22	27	27	27
	18"	45	25	13	13	32	45	45	45
	24"	65	35	18	18	45	65	65	65

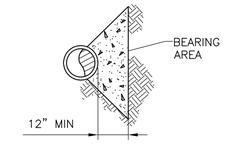

SECTION

NOTES:

1. JOINTS, FLANGE BOLTS AND FACE OF PLUGS TO BE KEPT CLEAR OF CONCRETE.
2. BLOCKS MUST BE POURED AGAINST UNDISTURBED SOIL.
3. THRUST BLOCKS TO BE CONSTRUCTED OF CLASS 423-C-2500 OR BETTER P.C.C.
4. THRUST BLOCKS AREA IS BASED ON TEST PRESSURE OF 150 PSI AND A HORIZONTAL SOIL BEARING STRENGTH OF 1500 PSI.
5. NUTS AND BOLTS ON ALL MJ FITTINGS SHALL BE PAINTED WITH TWO COATS OF KOPPERS 505, TNEMEC 46-450', AMERON OR EQUAL, 15 MILS EACH COAT.

TYPICAL THRUST BLOCK

DETAIL 2 / -

NTS

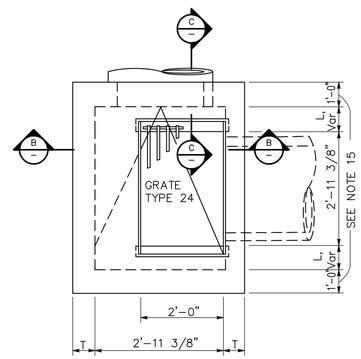

TYPE G2

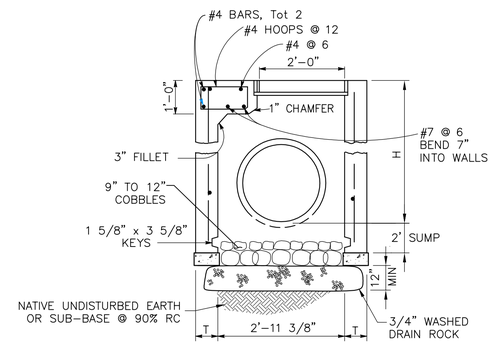

SECTION B-B

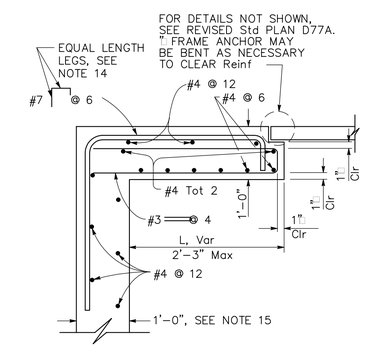

SECTION C-C

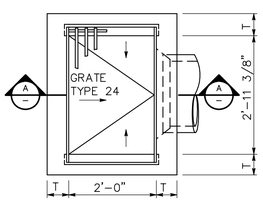

TYPE G1

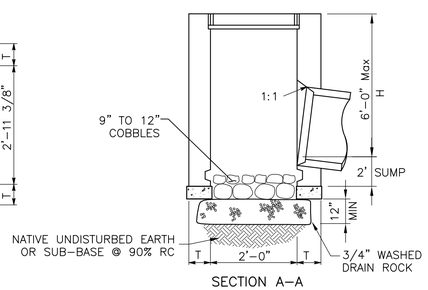

SECTION A-A

NOTES:

1. DRAIN INLET SHALL CONFORM TO CALTRANS TYPE G1 DRAIN INLET WITH GRATE TYPE 24 (STANDARD PLAN D73).
2. TOP 2' OF DRAIN INLET TO BE CAST IN PLACE WITH CURB AND GUTTER.
3. ALL GRATES SHALL BE BICYCLE PROOF.

DRAINAGE INLET - TYPE G1

DETAIL 3

NTS

NOTES:

1. DRAIN INLET SHALL CONFORM TO CALTRANS TYPE G2 DRAIN INLET WITH GRATE TYPE 24 (STANDARD PLAN D73).
2. TOP 2' OF DRAIN INLET TO BE CAST IN PLACE WITH CURB AND GUTTER.
3. ALL GRATES SHALL BE BICYCLE PROOF.

DRAINAGE INLET - TYPE G2

DETAIL 4

NTS

100% BID SET

REV	DATE	DESCRIPTION	BY

WARNING
0 1/2" 1"
IF THIS BAR SCALE DOES NOT MEASURE 1" THIS DWG HAS BEEN REDUCED SCALE ACCORDINGLY

CITY OF SOUTH LAKE TAHOE
DEPARTMENT OF PUBLIC WORKS
1052 TATA LANE
SOUTH LAKE TAHOE, CA 96150
Ph: (530) 542-6030 Fax: (530) 541-7524

REGISTERED PROFESSIONAL ENGINEER No. C80207 Exp. 09/30/16 CIVIL STATE OF CALIFORNIA

CDM Smith
12313 Soaring Way, Suite 2-D
Truckee, California 96161
Tel (530) 582-7235
Fax (530) 582-1098

DESIGNED BY: RHV
DRAWN BY: OMN
SHEET CHK'D BY: RHV
CROSS CHK'D BY: SLS
DATE: FEBRUARY 20, 2015

SIERRA TRACT PH 3 & 4 EROSION CONTROL PROJECT

SHEET TITLE

CIVIL DETAILS 8

JOB NO. 27497-93981
SCALE: AS NOTED
SHEET 54 OF 57
DWG. NO:
D-08

© 2012 CDM SMITH ALL RIGHTS RESERVED.
REUSE OF DOCUMENTS: THESE DOCUMENTS AND DESIGNS PROVIDED BY PROFESSIONAL SERVICE, INCORPORATED HEREIN, ARE THE PROPERTY OF CDM SMITH AND ARE NOT TO BE USED, IN WHOLE OR PART, FOR ANY OTHER PROJECT WITHOUT THE WRITTEN AUTHORIZATION OF CDM SMITH.

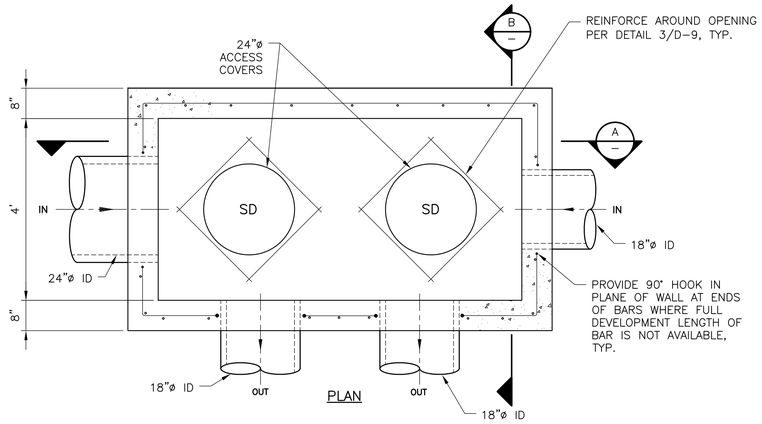

PLAN

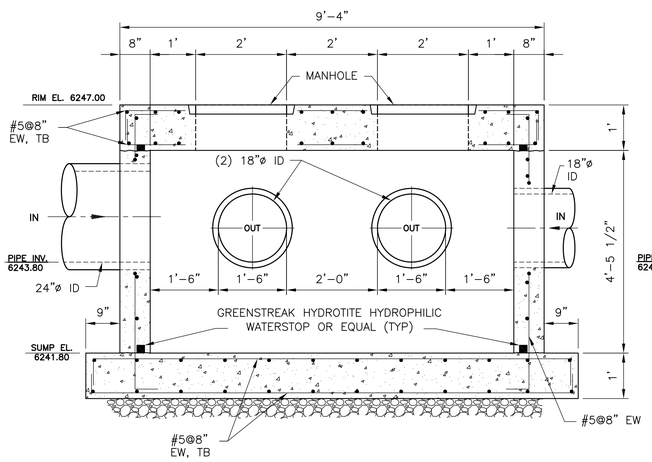

SECTION "A"

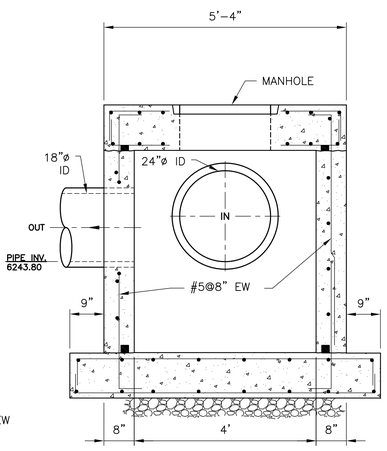

SECTION "B"

NOTES:

1. SEE SHEET D-09 FOR STRUCTURAL DETAILS AND NOTES.

STORM DRAIN VAULT

DETAIL 1

NTS

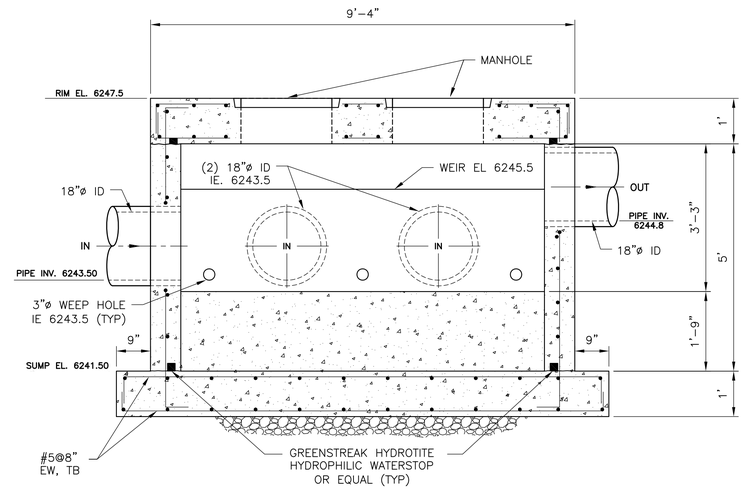

SECTION "A"

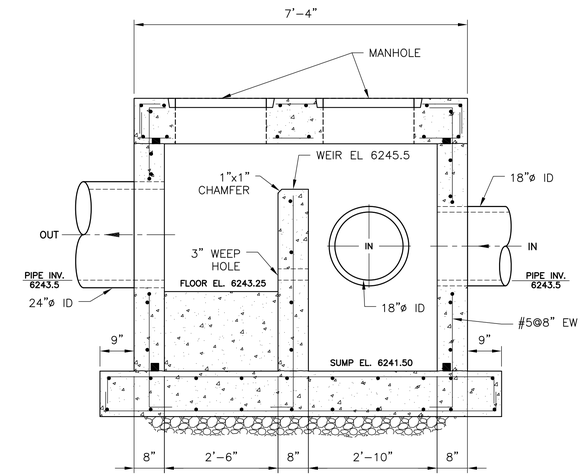

SECTION "B"

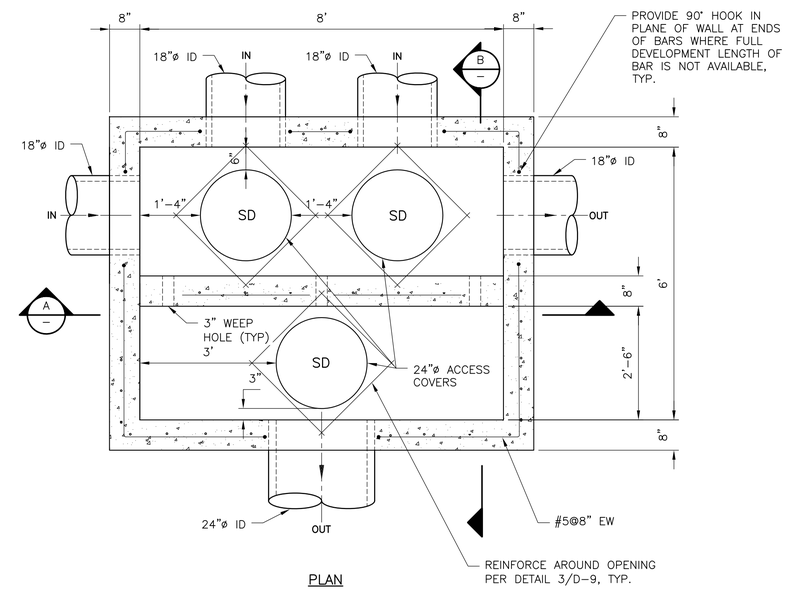

PLAN

NOTES:

1. SEE SHEET D-09 FOR STRUCTURAL DETAILS AND NOTES.

FLOW SPLITTER VAULT

DETAIL 2

NTS

100% BID SET

REV	DATE	DESCRIPTION	BY

WARNING
0 1/2" 1"
IF THIS BAR SCALE DOES NOT MEASURE 1" THIS DWG HAS BEEN REDUCED SCALE ACCORDINGLY

CITY OF SOUTH LAKE TAHOE
DEPARTMENT OF PUBLIC WORKS
1052 TATA LANE
SOUTH LAKE TAHOE, CA 96150
Ph: (530) 542-6030 Fax: (530) 541-7524

REGISTERED PROFESSIONAL ENGINEER
RICHARD H. VADEN JR.
No. C80207
Exp. 09/30/16
CIVIL
STATE OF CALIFORNIA

CDM Smith
12313 Soaring Way, Suite 2-D
Truckee, California 96161
Tel (530) 582-7235
Fax (530) 582-1098

DESIGNED BY: RHV
DRAWN BY: OMN
SHEET CHK'D BY: RHV
CROSS CHK'D BY: SLS
DATE: MAY 8, 2015

SIERRA TRACT PH 3 & 4 EROSION CONTROL PROJECT
SHEET TITLE
CIVIL DETAILS 9

JOB NO. 27497-93981
SCALE: AS NOTED
SHEET 55 OF 57
DWG. NO:
D-09

© 2012 CDM SMITH ALL RIGHTS RESERVED.
REUSE OF DOCUMENTS: THESE DOCUMENTS AND DESIGNS PROVIDED BY PROFESSIONAL SERVICE, INCORPORATED HEREIN, ARE THE PROPERTY OF CDM SMITH AND ARE NOT TO BE USED, IN WHOLE OR PART, FOR ANY OTHER PROJECT WITHOUT THE WRITTEN AUTHORIZATION OF CDM SMITH.

GENERAL STRUCTURAL NOTES

STRUCTURAL DETAILS AND NOTES:

THESE DETAILS AND NOTES APPLY TO CAST–IN–PLACE CONCRETE STRUCTURES INCLUDING HEADWALL OUTLET STRUCTURE (DETAIL 2, SHEET D–07), STORM DRAIN VAULT (DETAIL 1, SHEET D–08), AND FLOW SPLITTER VAULT (DETAIL 2, SHEET D–08)

DESIGN CRITERIA:

CODES:
- CBC 2013 CALIFORNIA BUILDING CODE
- ASCE 7–10 MINIMUM DESIGN LOADS FOR BUILDINGS AND OTHER STRUCTURES
- ACI 318–11 BUILDING CODE REQUIREMENTS FOR STRUCTURAL CONCRETE

RISK CATEGORY II

LIVE LOAD DESIGN DATA:

UNRESTRICTED VEHICULAR AREA	H20 (AASHTO)/300PSF
PROCESS SLABS	200 PSF

SNOW LOAD DESIGN DATA:

GROUND SNOW LOAD (Pg)	150 PSF

WIND DESIGN DATA:

BASIC WIND SPEED	V_{ult}=110 MPH (3 SECOND GUST) V_{asd} =85 MPH
EXPOSURE CATEGORY	C

SEISMIC DESIGN DATA:

SOIL SITE CLASS	D
MAPPED SPECTRAL RESPONSE ACCELERATIONS	
SHORT PERIOD	Ss = 1.38
ONE SECOND PERIOD	S1 = 0.52
SPECTRAL RESPONSE COEFFICIENTS	
SHORT PERIOD	Sds = 0.918
ONE SECOND PERIOD	Sd1 = 0.52
SEISMIC DESIGN CATEGORY	D
SEISMIC IMPORTANCE FACTOR	I = 1.0
BASIC SEISMIC–FORCE–RESISTING SYSTEMS:	
CONCRETE CAST–IN–PLACE WALLS	
SEISMIC RESPONSE COEFFICIENT	Cs = 0.306
RESPONSE MODIFICATION	R = 3
DESIGN BASE SHEAR	V = 0.306W KIP
LATERAL ANALYSIS PROCEDURE:	
EQUIVALENT LATERAL FORCE PROCEDURE	

FOUNDATIONS:

REQUIRED BEARING PRESSURE FOR FOUNDATIONS IS 1,500 PSF.

EXTERIOR FOUNDATIONS SHALL EXTEND TO A DEPTH = 1'–6" MIN

COEFFICIENT OF FRICTION = 0.4

SUBGRADE PREPARATION REQUIREMENTS:

OVER–EXCAVATE TO COMPETENT MATERIAL, REMOVING ALL ORGANICS, ROOTS, AND OTHER SOFT/ UNSUITABLE MATERIAL. DEWATER AS NEEDED TO BE ABLE TO ACHIEVE 90% COMPACTION (ASTM D1557) OF THE NATIVE SUBGRADE. THEN, PLACE STRUCTURAL FILL WITHIN A ZONE OF MIN. 2' OUT AND 1:1 DOWN FROM THE EDGES OF FOUNDATION. ALL STRUCTURAL FILL TO BE COMPACTED TO MIN. 90% EXCEPT THE FINAL 12" TO BE COMPACTED TO MIN 95%.

THE DEPTH OF OVER–EXCAVATION TO BE FIELD VERIFIED BY THE ENGINEER. FOR BIDDING PURPOSES, ASSUME A MINIMUM OF 3 FEET. IF SOFT AND WET SUBGRADE EXISTS AT THE –3' LEVEL, THE CONTRACTOR SHALL BE RESPONSIBLE FOR STABILIZING THE SUBGRADE BY APPLYING SUITABLE METHODS SUCH AS DEWATERING, PLACING STABILIZING GEOFABRIC, PUSHING AGGREGATE BASE INTO THE SOFT SOIL, OR WHATEVER MEANS ARE SUITABLE. IF ORGANICS AND ROOTS ARE ENCOUNTERED AT –3' LEVEL, ADDITIONAL OVER–EXCAVATION WOULD BE NEEDED AND THIS WILL NEED TO BE COMPENSATED SEPARATELY.

GENERAL CONDITIONS:

FIELD VERIFY ALL EXISTING DIMENSIONS PRIOR TO CONSTRUCTION.

WRITTEN DIMENSIONS SHALL TAKE PRECEDENCE OVER SCALED SIZES.

CONSTRUCTION NOTES:

PRIOR TO INSTALLATION OF EQUIPMENT, COORDINATE AND CONFIRM THE ANCHORAGE REQUIREMENTS WITH THE MANUFACTURER. THE ANCHORAGE SYSTEM SHALL NOT DAMAGE THE CONCRETE.

CONTRACTOR SHALL VERIFY ALL DIMENSIONS IN THE FIELD. THE PROJECT MANAGER SHALL BE NOTIFIED OF ANY DISCREPANCY BETWEEN DRAWINGS IMMEDIATELY UPON DISCOVERY.

THE STRUCTURE IS DESIGNED AS A STABLE UNIT AFTER ALL COMPONENTS ARE IN PLACE. TEMPORARILY BRACE THE STRUCTURE FOR STABILITY UNTIL ALL PERMANENT BRACING SYSTEM ARE COMPLETE. THE CONTRACTOR SHALL PROVIDE ALL SHORING AND BRACING NECESSARY TO ENSURE THE STABILITY OF ANY AND ALL PARTS OF THE STRUCTURE DURING CONSTRUCTION.

TEMPORARY SHORING SHALL NOT BE REMOVED UNTIL THE FULL STRENGTH (f'c) AND/OR (f'm) IS ACHIEVED.

CONTRACTOR SHALL BE RESPONSIBLE FOR DEWATERING.

ALL SHORING PLANS ARE TO BE DESIGNED BY CONTRACTOR'S LICENSED ENGINEER AND REVIEWED BY THE ENGINEER. THE CONTRACTOR SHALL DEVELOP THE BID FOR SHORING DESIGN, DEWATERING, AND OTHER PROJECT SUBSURFACE CONDITIONS, BASED ON AVAILABLE INFORMATION AND BY COLLECTING ADDITIONAL SITE SUBSURFACE DATA AS NEEDED.

CAST–IN–PLACE CONCRETE:

REINFORCED CONCRETE SHALL CONFORM TO ACI 318 AND ACI 301 'SPECIFICATIONS FOR STRUCTURAL CONCRETE FOR BUILDINGS'.

REINFORCING STEEL FABRICATION SHALL BE IN ACCORDANCE WITH THE LATEST EDITION OF THE CRSI MANUAL OF STANDARD PRACTICE AND IN COMPLIANCE WITH BUY AMERICA REQUIREMENTS.

ALL EXPOSED CORNERS OF CONCRETE SHALL HAVE 3/4" CHAMFER, UNLESS OTHERWISE NOTED.

UNLESS OTHERWISE INDICATED ON THE DRAWINGS, BARS SHALL BE DOWELED. DOWELS SHALL BE THE SAME SIZE AND SPACING AS THE REINFORCEMENT WHICH IS SPLICED UNLESS OTHERWISE NOTED.

STIRRUP SUPPORT BARS SHALL BE PROVIDED AS REQUIRED TO SECURE TOP BARS AGAINST DISPLACEMENT.

CONCRETE COVER OVER REINF BARS SHALL BE AS FOLLOWS:
- BEAMS, PEDESTALS AND COLUMNS:
  - FORMED CONCRETE SURFACES EXPOSED TO WEATHER, IN CONTACT WITH SOIL OR FLUIDS, OR BEAMS LOCATED OVER FLUIDS:
    - STIRRUPS AND TIES.....2"
    - PRINCIPAL REINFORCEMENT.....2 1/2"
- FOOTINGS AND SLABS ON GRADE:
  - FORMED CONCRETE SURFACES.....2"
  - AT UNFORMED CONCRETE SURFACES CAST AGAINST THE SOIL OR CONCRETE WORK MATS.....3"

CONCRETE COVER IS THE LEAST DISTANCE BETWEEN EMBEDDED REINFORCEMENT AND THE SURFACE OF THE CONCRETE. THE SURFACE OF THE CONCRETE IS THE BOTTOM OF RUSTICATION OR REVEAL STRIPS WHEN USED.

CONCRETE MIXES SHALL NOT CONTAIN FLY ASH.

CONCRETE MIXING OPERATIONS, ETC., SHALL CONFORM TO ASTM C94.

PLACEMENT OF CONCRETE SHALL CONFORM TO ACI 304.

CONCRETE CURING SHALL CONFORM TO ALL REQUIREMENTS OF THE CALIFORNIA DEPARTMENT OF TRANSPORTATION (CALTRANS) STANDARD SPECIFICATIONS, SECTION 90–1.03.

CONCRETE ANCHORS:

CONTRACTOR SHALL LOCATE EXISTING REINFORCING USING NON–DESTRUCTIVE METHODS PRIOR TO DRILLING HOLES FOR ADHESIVE AND EXPANSION ANCHORS. ADJUST SPACING OF ANCHORS TO MISS REINFORCING, HOWEVER, TOTAL NUMBER OF ANCHORS PROVIDED MUST EQUAL NUMBER SHOWN ON DRAWINGS.

ADHESIVE FOR EMBEDDED DOWELS AND ANCHORS SHALL BE SIMPSON SET–XP (ICC EVALUATION REPORT 2508), OR APPROVED EQUAL. ALL DRILLED HOLES SHALL BE SIZED ACCORDING TO MANUFACTURER'S RECOMMENDATIONS.

EXPANSION ANCHORS SHALL BE SIMPSON STRONG BOLT, (ICC EVALUATION REPORT 1991), OR APPROVED EQUAL.

TYPICAL STRUCTURAL MATERIALS:

CONCRETE
- FILL, DUCT ENCASEMENT, WHERE NOTED: f'c = 2,500 PSI
- CIVIL STRUCTURES: f'c = 4,500 PSI AT 28 DAYS
- REINFORCING STEEL: ASTM A615, GRADE 60
- CEMENT: ASTM C150, TYPE II
- AGGREGATE SHALL CONFORM TO ASTM C33

SPECIAL INSPECTION REQUIREMENTS

SPECIAL INSPECTIONS SHALL BE CONDUCTED IN ACCORDANCE WITH THE REQUIREMENTS SET FORTH IN CHAPTER 17 OF THE CALIFORNIA BUILDING CODE.

IN ACCORDANCE WITH THE REQUIREMENTS OF CHAPTER 17 OF THE BUILDING CODE, THE CONTRACTOR SHALL PROVIDE INDEPENDENT QUALIFIED PERSONNEL TO PERFORM THE FOLLOWING SPECIAL INSPECTIONS AND SHALL FURNISH INSPECTION REPORTS FROM THE SPECIAL INSPECTOR TO THE ARCHITECT, ENGINEER AND BUILDING OFFICIAL. THIS DOES NOT RELIEVE THE CONTRACTOR OF ANY RESPONSIBILITY TO PERFORM THE WORK IN ACCORDANCE WITH THE CONTRACT DOCUMENTS. THE CONTRACTOR SHALL NOTIFY THE INSPECTOR 24 HOURS IN ADVANCE OF ALL INSPECTIONS. SUBMIT SPECIAL INSPECTOR CREDENTIALS TO CITY 10 DAYS PRIOR TO CONSTRUCTION.

THE FOLLOWING ITEMS, AS A MINIMUM, SHALL RECEIVE SPECIAL INSPECTION:

CONCRETE CONSTRUCTION (1705.3)

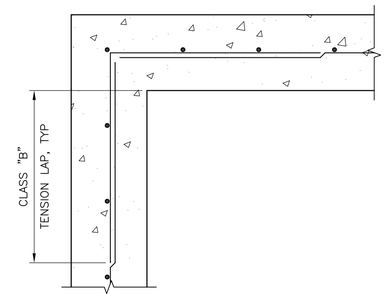

WALL CORNER REINFORCING

DETAIL 1 / –

NTS

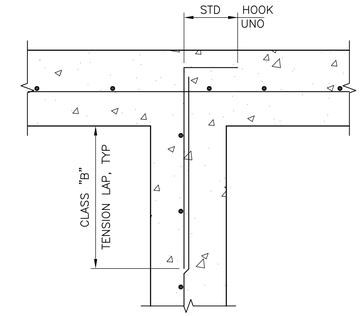

WALL INTERSECTION REINFORCING

DETAIL 2 / –

NTS

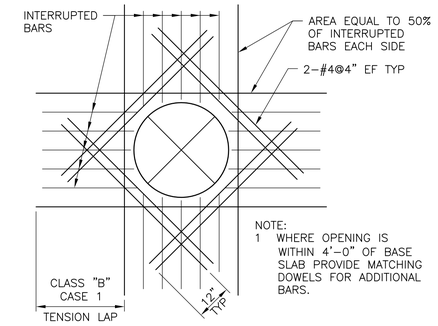

REINFORCEMENT AT CIRCULAR OPENINGS GREATER THAN 12"

DETAIL 3 / –

NTS

		WALLS AND SLABS			
		DEVELOPMENT LENGTH (L_d)(INCHES)		CLASS B LAP SPLICE (INCHES)	
BAR SIZE	DIAMETER (db) (INCHES)	"TOP" BARS	OTHER	"TOP" BARS	OTHER
		REINFORCING BARS IN TENSION			
#3	0.375	12	12	16	16
#4	0.5	15	12	20	16
#5	0.625	19	15	24	19
#6	0.75	22	17	29	22
#7	0.875	33	25	42	33
#8	1.0	37	29	48	37
#9	1.125	46	36	60	46
#10	1.25	57	44	74	57
#11	1.375	68	53	89	68

NOTES:

1 "TOP" BARS SHALL BE HORIZONTAL REINFORCEMENT PLACED SO THAT MORE THAN 12" OF FRESH CONCRETE IS CAST IN THE MEMBER BELOW THE DEVELOPMENT LENGTH OR SPLICE.

2 CLEAR SPACING OF BARS BEING DEVELOPED OR SPLICED SHALL
A) NOT BE LESS THAN d_b, HAVE CLEAR COVER NOT LESS THAN d_b, AND STIRRUPS OR TIES THROUGHOUT L_d NOT LESS THAN THE CODE MINIMUM OR;
B) CLEAR SPACING OF BARS WHERE d_b=DIAMETER OF REINFORCING BAR AND L_d=DEVELOPMENT LENGTH.

3 FOR SPECIAL SPLICE REQUIREMENTS FOR COLUMNS AND END BEARING SPLICES IN COMPRESSION SEE ACI 318 CHAPTER 12.

4 TABLE IS BASED ON f'c = 4000 PSI AND fy = 60,000 PSI. LAP SPLICE AND DEVELOPMENT LENGTHS SHALL BE INCREASED FOR LOWER CONCRETE COMPRESSIVE STRENGTH AS FOLLOWS:

	MULTIPLIER		
f'c 2500 PSI	1.27	f'c 3500 PSI	1.07
f'c 3000 PSI	1.16	f'c 4500 PSI	0.94

STANDARD HOOK AND LAP SPLICE IN CONCRETE

DETAIL 4 / –

NOT TO SCALE

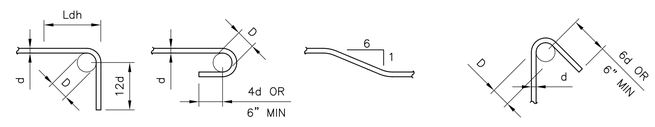

90° STD HOOK | 180° STD HOOK | MAX OFFSET BEND | 135° STD HOOK

D=6d FOR #3 TO #8
D=8d FOR #9 TO #11
D=12d FOR #14 AND #18

PRINCIPAL REINFORCING

MIN D=1 1/2" FOR #3
MIN D=2" FOR #4
MIN D=2 1/2" FOR #5

STIRRUPS AND TIES

BAR BENDS

DETAIL 5 / –

NTS

BAR SIZE	DIAMETER (db) (INCHES)	90° STD HOOK (L_{dh}) (INCHES)
#3	0.375	6
#4	0.5	7
#5	0.625	9
#6	0.75	10
#7	0.875	12
#8	1.0	14
#9	1.125	15
#10	1.25	17
#11	1.375	19

NOTES:
1 ALL BENDS SHALL BE MADE COLD.
2 #14 AND #18 BARS SHALL BE BEND TESTED AND LAB APPROVED PRIOR TO BENDING.

100% BID SET

REV	DATE	DESCRIPTION	BY

WARNING
0 1/2" 1"
IF THIS BAR SCALE DOES NOT MEASURE 1" THIS DWG HAS BEEN REDUCED SCALE ACCORDINGLY

CITY OF SOUTH LAKE TAHOE
DEPARTMENT OF PUBLIC WORKS
1052 TATA LANE
SOUTH LAKE TAHOE, CA 96150
Ph: (530) 542-6030 Fax: (530) 541-7524

REGISTERED PROFESSIONAL ENGINEER No. C80207 Exp. 09/30/16 CIVIL STATE OF CALIFORNIA

CDM Smith
12313 Soaring Way, Suite 2-D
Truckee, California 96161
Tel (530) 582-7235
Fax (530) 582-1098

DESIGNED BY: RHV
DRAWN BY: OMN
SHEET CHK'D BY: RHV
CROSS CHK'D BY: SLS
DATE: MAY 8, 2015

SIERRA TRACT PH 3 & 4 EROSION CONTROL PROJECT

SHEET TITLE
STRUCTURAL DETAILS AND NOTES

JOB NO. 27497–93981
SCALE: AS NOTED
SHEET 56 OF 57
DWG. NO:
D-10

© 2012 CDM SMITH ALL RIGHTS RESERVED.
REUSE OF DOCUMENTS: THESE DOCUMENTS AND DESIGNS PROVIDED BY PROFESSIONAL SERVICE, INCORPORATED HEREIN, ARE THE PROPERTY OF CDM SMITH AND ARE NOT TO BE USED, IN WHOLE OR PART, FOR ANY OTHER PROJECT WITHOUT THE WRITTEN AUTHORIZATION OF CDM SMITH.

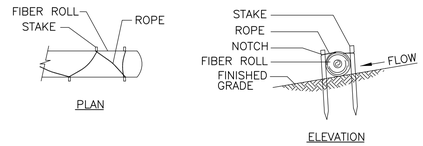

STACKING AND LASHING DETAIL

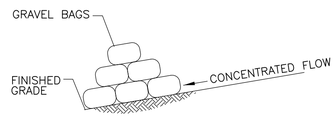

SECTION

NOTES:

1. SPILLWAY DEPTH "D" SHALL BE MAINTAINED TO PREVENT FLANKING OF CONCENTRATED FLOW AROUND THE ENDS OF THE CHECK DAM.

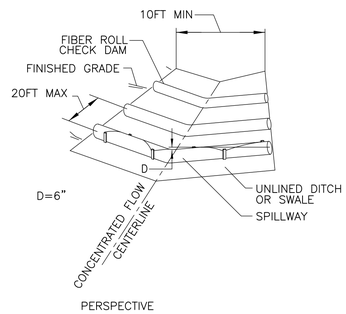

TEMPORARY FIBER ROLL CHECK DAM (TYPE I)

CHECK DAM

DETAIL 1 / NTS

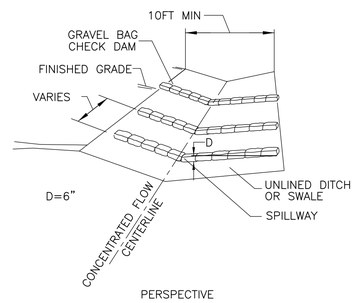

TEMPORARY GRAVEL BAG CHECK DAM (TYPE II)

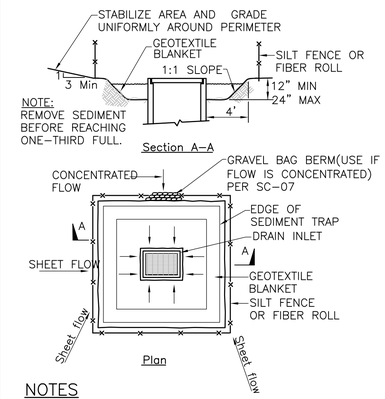

NOTE:
REMOVE SEDIMENT BEFORE REACHING ONE–THIRD FULL.

NOTES

1. FOR USE IN CLEARED AND GRUBBED AND IN GRADED AREAS.
2. SHAPE BASIN SO THAT LONGEST INFLOW AREA FACES LONGEST LENGTH OF TRAP. 3. FOR CONCENTRATED FLOWS, SHAPE BASIN IN 2:1 RATIO WITH LENGTH ORIENTED TOWARDS DIRECTION OF FLOW.

DROP INLET PROTECTION TYPE 2

DETAIL 2 / NTS

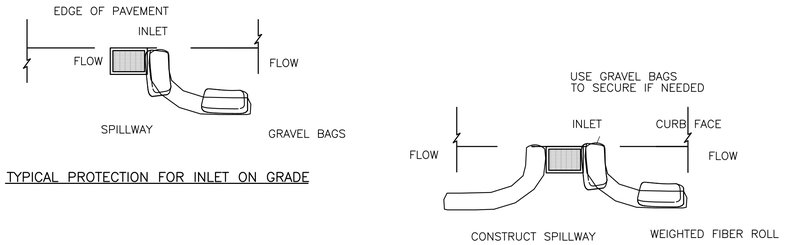

TYPICAL PROTECTION FOR INLET ON GRADE

TYPICAL PROTECTION FOR INLET ON SUMP

NOTES:

1. INTENDED FOR SHORT–TERM USE.
2. USE TO INHIBIT NON–STORM WATER FLOW.
3. ALLOW FOR PROPER MAINTENANCE AND CLEANUP.
4. BAGS MUST BE REMOVED AFTER ADJACENT OPERATION IS COMPLETED
5. NOT APPLICABLE IN AREAS WITH HIGH SILTS AND CLAYS WITHOUT FILTER FABRIC.
6. USE ONLY 3/4" WASHED DRAIN ROCK TO FILL GRAVEL BAGS.
7. PROTECT FROM TRAFFIC WITH BARRICADES AND DELINEATORS TO AVOID DAMAGE..

DROP INLET PROTECTION TYPE 1

DETAIL 3 / NTS

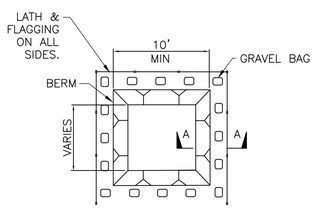

PLAN
TYPE "BELOW GRADE"

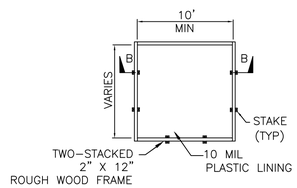

PLAN
TYPE "ABOVE GRADE"

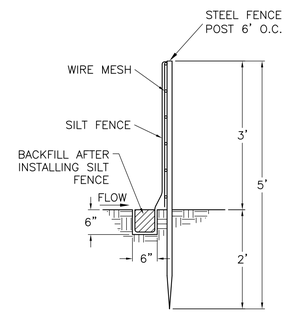

NOTE:
THE CONTRACTOR MAY USE MANUFACTURED SILT FENCING IN LIEU OF THE ABOVE, SUBJECT TO SUBMITTAL OF THE MANUFACTURE'S DATA SHEETS TO THE ENGINEER FOR APPROVAL. SILT FENCE SHALL BE COMMERCIAL GRADE AND APPROVABLE BY TRPA PRIOR TO INSTALLATION.

SILT FENCE

DETAIL 5 / –

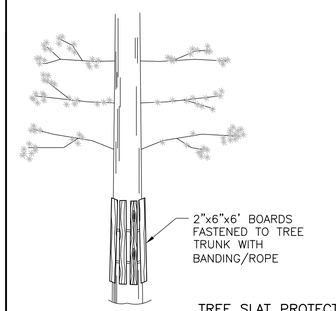

TREE SLAT PROTECTION

DETAIL 6 / –

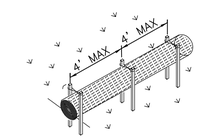

TYPE 2 FIBER ROLL INSTALLATION

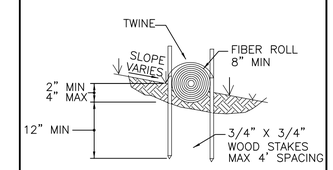

FIBER ROLL

DETAIL 7 / –

SECTION A–A

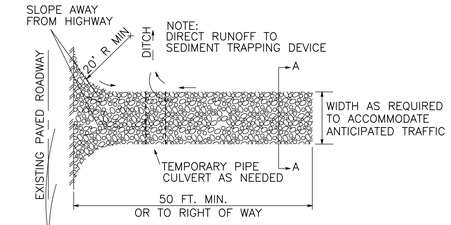

STABILIZED CONSTRUCTION ENTRANCE

DETAIL 8 / –

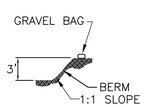

SECTION A–A

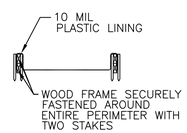

SECTION B–B

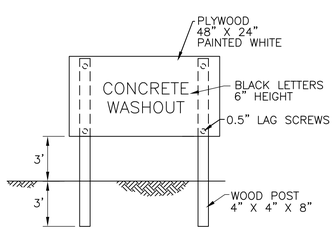

CONCRETE WASHOUT SIGN DETAIL (OR EQUIVALENT)

NOTES:

1. ACTUAL LAYOUT DETERMINED IN FIELD.
2. THE CONCRETE WASHOUT SIGN SHALL BE INSTALLED WITHIN 30 FT. OF THE TEMPORARY CONCRETE WASHOUT FACILITY.

CONCRETE WASHOUT

DETAIL 4 / –

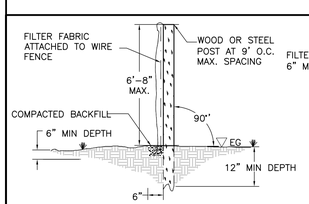

SILT FENCE DETAIL

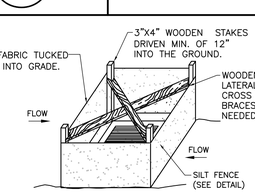

DROP INLET DETAIL

NOTES:

1. TEMPORARY EROSION CONTROL (TEMPORARY SEDIMENT BARRIERS) SHALL BE INSTALLED AND MAINTAINED THROUGHOUT THE PROJECT SITE TO INTERCEPT AND RETAIN SMALL SEDIMENT FROM DISTURBED OR UNPROTECTED AREAS DURING CONSTRUCTION. INSTALLATION SHALL BE IN ACCORDANCE WITH THE SPECIAL PROVISIONS AND THE STANDARD SPECIFICATIONS.

TEMPORARY EROSION CONTROL

DETAIL 9 / –

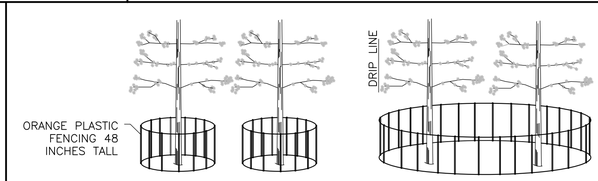

NOTES:

1 PLACING ANY MATERIAL – TEMPORARY OR OTHERWISE – WITHIN PROTECTIVE FENCING OR ENTERING PROTECTION AREAS MAY RESULT IN UP TO A $5,000 PENALTY PER VIOLATION PER DAY (SECT 65.2 I & J).

2 METAL OR WIRE MESH FENCING MAY BE REQUIRED.

TREE PROTECTION

DETAIL 10 / –

100% BID SET

REV	DATE	DESCRIPTION	BY

WARNING
0 1/2" 1"
IF THIS BAR SCALE DOES NOT MEASURE 1" THIS DWG HAS BEEN REDUCED SCALE ACCORDINGLY

CITY OF SOUTH LAKE TAHOE
DEPARTMENT OF PUBLIC WORKS
1052 TATA LANE
SOUTH LAKE TAHOE, CA 96150
Ph: (530) 542-6030 Fax: (530) 541-7524

REGISTERED PROFESSIONAL ENGINEER No. C80207 Exp. 09/30/16 CIVIL STATE OF CALIFORNIA

CDM Smith
12313 Soaring Way, Suite 2-D
Truckee, California 96161
Tel (530) 582-7235
Fax (530) 582-1098

DESIGNED BY: RHV
DRAWN BY: OMN
SHEET CHK'D BY: RHV
CROSS CHK'D BY: SLS
DATE: MAY 8, 2015

SIERRA TRACT PH 3 & 4 EROSION CONTROL PROJECT

SHEET TITLE
WATER POLLUTION CONTROL DETAILS

JOB NO. 27497–93981
SCALE: AS NOTED
SHEET 57 OF 57
DWG. NO:
D-11

© 2012 CDM SMITH ALL RIGHTS RESERVED.
REUSE OF DOCUMENTS: THESE DOCUMENTS AND DESIGNS PROVIDED BY PROFESSIONAL SERVICE, INCORPORATED HEREIN, ARE THE PROPERTY OF CDM SMITH AND ARE NOT TO BE USED, IN WHOLE OR PART, FOR ANY OTHER PROJECT WITHOUT THE WRITTEN AUTHORIZATION OF CDM SMITH.